CONTRACT BIDDING DOCUMENTS

FOR

TOWN OF WEST HARTFORD
TRAFFIC SIGNAL LOOP DETECTORS

BID # 6186F

TOWN OF WEST HARTFORD

INFORMATION

TOWN OF WEST HARTFORD
TRAFFIC SIGNAL LOOP DETECTORS
BID#6186F

PROJECT MANAGER

DUANE MARTIN
PROJECT ENGINEER II

ALL QUESTIONS TO

PURCHASING SERVICES
TAMMY BRADLEY
SENIOR BUYER

All questions must be submitted in writing and mailed to the Purchasing Office, emailed to TammyB@westhartford.org, or faxed to (860) 561-7492 at least seven calendar days prior to the date established for the opening of bids. Do not call the Engineer/Architect, Project Manager or Purchasing Office with questions.

1.03 TABLE OF CONTENTS

I.00 INTRODUCTORY INFORMATION
- I.01 Title Page
- I.02 Project Team
- I.03 Table of Contents
- I.04 List of Drawings
- I.05 Project Narrative

2.00 INFORMATION FOR BIDDERS
- 2.01 Invitation to Bid
- 2.02 Instructions to Bidders
- 2.03 Bid Forms

3.00 LABOR REQUIREMENTS
- 3.01 Prevailing Wage Rates

4.00 CONTRACT
- 4.01 Sample Contract

5.00 GENERAL CONDITIONS
- 5.01 Town of West Hartford Rules & Specifications, etc.
- 5.02 Payments
- 5.03 State of Connecticut Standard Specifications
- 5.04 Utilities
- 5.05 Obligations of Contractor
- 5.06 Duties and Responsibilities of the Engineer
- 5.07 Assignment
- 5.08 Liability - Indemnity
- 5.09 Blasting Requirements
- 5.10 Avoidance of Abandonment
- 5.11 Delay of Work by Town and Work by Others
- 5.12 Defective Work
- 5.13 Time
- 5.14 Damages to be Paid Town; and Extension of Time
- 5.15 Quantities
- 5.16 Prices
- 5.17 Alterations and Additional Work
- 5.18 Additional Payments
- 5.19 Partial Estimates and Payments
- 5.20 Final Estimate
- 5.21 Withholding Payment
- 5.22 Waiver
- 5.23 Connecticut Occupational Safety and Health Act
- 5.24 Provisions Required by Law Deemed Inserted
- 5.25 Termination or Suspension of the Contract

6.00 GENERAL SPECIFICATIONS
6.01 Handling and Distribution
6.02 Materials - Samples - Inspection - Approval
6.03 Shop and Working Drawings
6.04 Occupying Private Land
6.05 Interference With and Protection of Streets
6.06 Storage of Materials and Equipment
6.07 Insufficiency of Safety Precautions
6.08 Traffic Control
6.09 Sanitary Regulations
6.10 Lines, Grades and Measurements
6.11 Work to Conform
6.12 Computation of Quantities
6.13 Planning and Progress Schedules
6.14 Precautions Against Adverse Weather
6.15 Definitions
6.16 Abbreviations

7.00 TECHNICAL SPECIFICATIONS

8.00 EXHIBITS
8.01 Exhibit A - Insurance
8.02 Exhibit B - Traffic Control

1.04 LIST OF DRAWINGS

Detector Lead in Cross Section Typical Installation Details – Handholes

Handholes – Lead-in Diagram
Loop Color – Splicing Diagram

PROJECT NARRATIVE

Traffic Signal Loop Detectors

This work will consist of the installation of traffic signal loop detectors, conduit, and handholes in conjunction with the Town of West Hartford's pavement maintenance program or as needed by the Town of West Hartford, Department of Public Works, Traffic Signal Maintenance Division in accordance with these specifications or as ordered. The work shall conform to the "State of Connecticut, Department of Transportation, Standard Specifications for Roads, Bridges, and Incidental Construction, Form 816, 2004" as amended and supplemented.

The Contractor will be responsible with no additional payment for the necessary maintenance and protection of pedestrian and vehicular traffic associated with this work. West Hartford police shall be used for private duty traffic control, if available. If not available, private qualified traffic control personnel will be permitted. The Contractor shall schedule the police, pay for the police or private traffic control services, and then submit all receipts to the Town for reimbursement. **There will be no additional markup for police or private traffic control personnel.**

The Town of West Hartford's Policy Regarding the Maintenance and Protection of Traffic and Pedestrians During Construction Within Street Rights of Way (Revised March 2010) is enclosed for bid reference and use during the completion of work associated with this bid.

All costs associated with Mobilization, Demobilization, Police, Maintenance and Protection of Traffic, and Bonding shall be included in the bid prices.

All pricing shall be in effect for a three (3) year period:

Year 1: May 1, 2011 to December 31, 2011
Year 2: January 1, 2012 to December 31, 2012
Year 3: January 1, 2013 to December 31, 2013

2.00 INFORMATION FOR BIDDERS

2.01 Invitation to Bid

2.02 Instructions to Bidders

2.03 Bid Forms

2.01 INVITATION TO BID

2.0l.0l Sealed bids marked **"TRAFFIC SIGNAL LOOP DETECTORS" Bid# 6186F** will be received at the office of the Division of Purchasing Services, Room 223, Town Hall, 50 South Main Street, West Hartford, Connecticut until 2:00 PM on APRIL 5, 2011 at which time they will be publicly opened and read.

Plans and specifications are available for downloading at http://west-harford.com/TownServices/TownDepartments/FinancialServices/BidListCaveat.htm Any questions concerning this request for bid shall be addressed to the Purchasing Agent at the address above.

2.01.02 All bidders must file with their bid, a Certified Check, Treasurer's Check or Bid Bond made payable to the Town of West Hartford in the amount of 10% of the total base bid price.

2.01.03 Performance, Labor and Materials Payment Bonds in the amount of the contract price shall be required of the successful bidder, if the contract pursuant to this request for bids exceeds $50,000.00.

2.01.04 No bid may be withdrawn for a period of 90 days after the opening of bids without the approval and written consent of the Town of West Hartford.

2.01.05 The right is reserved to reject any and all bids, to waive any informalities in the bidding and to make awards in any manner that is the most beneficial to the Town. Deviation from the "Contract Bidding Documents" may render such bids voidable at the Town's sole option.

2.01.06 The work described herein shall be completed as required. Unless otherwise stated, time is of the essence.

2.01.07 All prospective bidders are hereby notified that in order to obtain a permit to blast within West Hartford, they must present evidence of adequate insurance protection by filing a properly executed copy of the attached Public Liability Endorsement with the West Hartford Fire Department.

2.01.08 Overtime Engineering Inspection Fees - N/A
The charge payable to the Town by the Contractor for engineering and inspection services performed by Town personnel on holidays and when Town employees are required to work in excess of 37.5 hours per week as a result of the Contractor's work schedule will be:

Between 37.5 and 40 hours - the then actual hourly rate of the inspector.
Over 40 hours - 1.5 times the then actual hourly rate of the inspector.
Holidays - 1.5 times the then actual hourly rate of the inspector.

Reference Information for Bidders Section 2.02.24.

2.01.09 Refuse Disposal Fees

The Town of West Hartford's transfer station shall only accept yard waste for an established fee. All construction waste and demolition materials shall be transported and legally disposed of at the Connecticut Resource Recovery Authority or other legal site selected by the contractor.

2.01.10 Disposal of Excavated Material

The Contractor shall not dispose of his excavated material on private or public property in West Hartford without the permission of the Director of Community Services.

BID RESULTS

Bidders are encouraged to attend the Town's bid opening at which time the public is afforded an opportunity to record bid prices received in response to the Town's solicitation. Bidders who would like the results of the bid but are unable to attend the bid opening, may check the Town website, http://west-hartford.com/TownServices/TownDepartments/FinancialServices/BidResults.htm a week after the bid opening date. Bidders calling the Purchasing Office for bid results will be referred to the above procedure.

2.02 INSTRUCTIONS TO BIDDERS

TABLE OF CONTENTS

2.02.01 Time for Opening bids
2.02.02 Form of Bid
2.02.03 Submission of Bid
2.02.04 Quantities
2.02.05 Duties of Bidder
2.02.06 Underground Objects, Soils, etc
2.02.07 Bid Surety
2.02.08 Performance, Labor and Material Bonds
2.02.09 Rejection of Bids
2.02.10 Bidder to Furnish Information
2.02.11 Award of Contract
2.02.12 Execution of Contract and Bond
2.02.13 Time
2.02.14 Sales Tax
2.02.15 Out of State Contractors
2.02.16 Address of Contractor
2.02.17 Scope and Term of Insurance
2.02.18 Insurance Certificates
2.02.19 Withdrawal of Offer
2.02.20 Limitations on Surety Bond
2.02.21 Reference Specifications
2.02.22 Public Acts Related to Working Near Gas Mains and Public Acts Related to Working Near Power Lines
2.02.23 Equal Opportunity
2.02.24 Engineering and Inspection Charges

2.02 INSTRUCTIONS TO BIDDERS

2.02.01 TIME FOR OPENING BIDS Sealed bids or proposals for performing the work described herein will be received by the Division of Purchasing Services, Room 223, 50 South Main Street, West Hartford, Connecticut, until the time named on the title page hereof at which time and place they will be publicly opened and read. After the bids are opened and read they will be taken under advisement and the award of the contract, if awarded, will be made as soon thereafter as practicable.

2.02.02 FORM OF BID Each bid must be made in and on the form prepared therefore and attached hereto and the proposal form must be submitted complete and unchanged as furnished, except for the insertion of names, addresses, prices and other required data in the blank spaces provided therefore. All appropriate blanks must be filled out. A duplicate bid form is included and should also be completed and submitted. Any changes to, or material deviations from the form provided, shall render such bid voidable at the Town's sole option.

Bidders shall state, both in writing and in figures, the proposed price for each separate item of the work called for in the annexed proposal form. These prices will be used to compare bids. If any price is omitted, the proposal shall be rejected. In case of discrepancy between the prices in written words and in figures, the former shall govern.

2.02.03 SUBMISSION OF BID Bids shall be sealed in an envelope marked "Sealed Bid" with the bid proposal number and the vendor's name and address. Late bids will not be accepted.

2.02.04 QUANTITIES Bids will be compared on the basis of the Engineer's estimate of quantities as set forth in the Schedule of Bids.

These quantities are given solely as a basis for the comparison of bids. The Town does not expressly, or by implication, agree that the actual amount of work will correspond therewith, but reserves the right to increase or decrease the amount of any item or portion of the work as may be required.

Attention is particularly called to the fact that some items may be largely dependent on soil or foundation conditions and therefore, may vary widely from the estimated quantities or may even be omitted. An increase or decrease in the quantity for any item shall not be regarded as sufficient grounds for an increase or decrease in the unit price.

Bidders must satisfy themselves, by personal examination and by such other means as they may prefer, as to the actual conditions and requirements of the work and the accuracy of the estimate of the Engineer, and shall not, at any time after the submission of a bid, dispute or complain of such statement or estimate of the Engineer nor assert that there was any misrepresentation or misunderstanding in regard to the nature or amount of work to be done.

The work has been divided into items in order to enable the bidder to bid for the different portions of the work in accordance with his estimate of their costs individually and to provide for payment respective of quantity variations. Bidders are especially cautioned not to submit bids, which are unbalanced. If, in the opinion of the Town, any bid submitted appears unbalanced, this action may be sufficient cause for the rejection of the entire bid or it may result in a monetary loss to the Contractor if certain portions of the work are increased or decreased as provided in the Contract.

2.02.05 DUTIES OF BIDDER The bidder is required to examine carefully the site of the work, the project drawings, if any, the Notice to Contractor, Information for Bidders, General Conditions, General Specifications, Technical Specifications, Wage Rates and Certification and Bid Proposal hereinafter referred to from time to time as the Contract Bidding Documents. He must satisfy himself as to the actual conditions and requirements of the work to be performed and the materials to be furnished and shall make himself familiar with all Federal, State and local laws, ordinances and regulations which in any manner affect the work or its conduct. No plea of misunderstanding or ignorance of such laws, etc., will be considered as an excuse for failure to comply with any of the requirements hereof or as reason for any additional compensation or waiver of any requirements of Contract Bidding Documents.

Every bid submitted must be based upon the Contract Bidding Documents if any, described herein and upon the written, typed or printed texts of the Contract Bidding Documents. Oral statements by any officer or employee of the Town will not be binding. Questions shall be submitted in writing to the Division of Purchasing Services Manager at least seven (7) working days before the established date for receipt of bids. If the question involves the equality or use of products or methods, it must be accompanied by drawings, specifications or other data in sufficient detail to enable the Engineer to determine the equality or suitability of the product or method. In general, the Town will neither approve nor disapprove particular products prior to the opening of the bids; such products will be considered when offered by the Contractor for incorporation into the work.

2.02.06 UNDERGROUND OBJECTS, SOILS, ETC If any Contract Bidding Document or drawing or similar source of information furnished to prospective bidders or to awarded contractors purports to show underground objects or conditions or pipes, ducts or similar structures or observations or indications of soils, rock, ground water, etc., made from borings, test pits or prior excavations, such information must be considered as only advisory and not necessarily correct and complete, having been obtained, made and plotted for the benefit of the Engineer. Bidders and awarded contractors must recognize that, by reason of the methods commonly used for obtaining and expressing such data, this information and data is limited and subject to error or misunderstanding. The terms used to describe soils, ground water, etc. are subject to local usage and

to the individual opinion of the person making the records. Ground water conditions vary from time to time. The locations, sizes, depths, etc. of underground pipes, ducts and structures are usually obtained from records of others and such data, when shown on plans of the Town, are subject to possible errors in the source of the information and also errors in transcription. The Town, together with its agents, does not warrant or represent that the indications on Contract Drawings or other documents of underground conditions, objects, etc., as described above, are either approximately correct or complete, and any party making use of such indications or basing estimates of proposals thereon must agree that they shall have no claim or right of action against either the Town or any person or party acting for or under it for the consequences, delays, expense or losses which may occur or have occurred in event that such indications shall be found to have been incomplete, incorrect or misleading. Bidders must make such investigations as they deem necessary and form their own opinions of the materials, conditions and difficulties or obstacles likely to be encountered.

Contractors, as required by State law, are required to notify the utilities coordinating agency for field locations of existing underground utilities. A town permit is required for each project location. Prior to the issuance of a Town Permit for work within Town rights of way, the awarded Contractor shall secure a "Call Before You Dig" number and this number shall appear on the permit.

2.02.07 BID SURETY Each bid must be accompanied by a Bid Bond, Certified Check or Treasurer's Check in the amount of ten percent (10%) of the total base bid and made payable to the "Town of West Hartford". Failure to provide the bid surety will result in rejection of the bid. All surety checks shall be returned to the respective bidders when the contract is awarded.

2.02.08 PERFORMANCE, LABOR AND MATERIAL BONDS If the amount of the contract to be awarded is Fifty Thousand Dollars ($50,000) or more, the successful Contract Bidder shall furnish and pay for the Surety favoring the Town of West Hartford in the full amount of the estimated total base bid as determined by extending the unit prices by the estimated quantities. This Bond shall provide 100% security for faithful performance and for payment of all persons performing labor or furnishing materials in connection with this Contract and shall be executed by a company authorized to transact business within the State of Connecticut.

The Bidder shall deliver the required bonds to the Town not later than five (5) days from notice of the Town's intent to award the Contract to the bidder and prior to execution of a contract.

2.02.09 REJECTION OF BIDS The Town shall not award this Contract to a bidder who does not furnish evidence satisfactory to the Town that he has ability, equipment and experience in this class of work, that he has satisfactorily completed work of similar character, magnitude and importance, and that he has sufficient capital and capacity to enable him to prosecute the same

successfully within the time limit stated herein. Prospective bidders who cannot fully satisfy these requirements are requested not to submit bids. Failure to qualify in this respect may be considered sufficient cause to reject any bid whatsoever.

The Town reserves the right to reject any one or more bids as it may deem to be in the best interests of the Town, and this right to reject is not limited to the specific reasons mentioned herein. A bid may, but does not have to be rejected:

(a) If it is incomplete, conditional or obscure, or if it contains additions not called for, erasures, alterations, obvious errors or irregularities of any kind, or if it does not conform in every respect to the requirements stated in these contract bidding documents, or if it is on sheets removed from this pamphlet;

(b) If the individual unit prices bid are considered by the Town to be unbalanced in a manner likely to be detrimental to the Town;

(c) If the Town shall be of the opinion that it was prepared without adequate care or knowledge of the conditions relative to the work, or under a misunderstanding of the requirements of the Town, or if it is for work other than that shown on applicable Drawings or specified;

(d) For failure to furnish information promptly as required herein.

(e) If the Contractor has failed to satisfactorily complete prior contracts.

(f) If the Contractor has not performed work of a similar size or type in the past.

2.02.10 BIDDER TO FURNISH INFORMATION In order that the Town may have information to guide it in the award of the Contract, the bidders whose bids are being considered shall, on request of the Town, submit the following information within four working (4) days after the receipt of such a request;

(a) A list of previous work of similar character and magnitude which has been performed or furnished by the bidder, or by the principals to the bid, together with information as to each such job, its character, magnitude, date, location and that it was carried forward and completed in a matter entirely satisfactory to the party under whose supervision it was done.

(b) A statement of the capacity, equipment and forces of the bidder which are or will be available to the bidder together with a statement as to whether things are owned by the bidder, or under lease or contract to the bidder.

(c) A brief statement of the methods and order of work the bidder proposes to perform and the rate of progress on the several parts of the same which the bidder expects to accomplish.

(d) A sworn copy of the latest statement of the financial condition of the bidder together with sworn statements as to any and every important change which may have occurred to alter the said financial condition since the date of the above statement, with supporting evidence if and as requested.

(e) References showing that the bidder undoubtedly has ample capital, credit and other resources to finance the work throughout and without being dependent on release of portions of retained percentage before completion of work, and without having estimates for payment made more often than once each month and at such times as will conform to payment practices of the Town.

2.02.11 AWARD OF CONTRACT It is the intent of the Town to award a Contract to the contractor providing the Best Value and is in accordance with the requirements of the Bidding Documents and does not exceed available funds. The Town shall have the right to waive informalities or irregularities in a Bid received and to accept the Bid which, in the Town's judgement, is in the Town's own best interests.

The Town shall have the right to accept Alternates in any order or combination, unless otherwise specifically provided in the Bidding Documents, and to determine the low Bidder on the basis of the sum of the Base Bid and Alternates accepted.

2.02.12 EXECUTION OF CONTRACT AND BONDS The bidder to whom the Contract is awarded shall execute the Contract and required performance and labor and materials surety within five (5) working days (not including Saturdays, Sundays, or holidays) from the date of notice by the Town to the bidder, that the Contract is ready for signature, and, in case of the bidder's failure or neglect to do so, the Town may determine that the bidder has abandoned the Contract and thereupon the acceptance of the bid and the award shall be null and void and the bid surety accompanying the bid shall be forfeited to the Town.

The Contractor shall increase the principal amount of the performance and labor and materials payment bond(s) in direct proportion to any increase in the value of the Contract resulting from change orders.

2.02.13 TIME See Section 5.13 of the General Conditions.

2.02.14 SALES TAX Under the terms of the regulations referring to contractors and subcontractors, issued by the State Tax Commission in administration of the State Sales and Use Tax, to which the bidder is referred, the Contractor may

purchase such materials and supplies as are to be physically incorporated in and become a permanent part of the project being performed under this Contract without payment of tax and shall not include in his bid nor charge any use or sales tax thereon.

2.02.15 OUT-OF-STATE CONTRACTORS The Contractor, if not a resident of the State of Connecticut, or, in the case of a partnership, the partners, if not residents, shall appoint an approved person having permanent local residence as his or their attorney, upon whom all lawful processes, proceedings or notices may be served. The Contractor, if a corporation not organized under the laws of Connecticut, shall comply with the provisions of the General Statutes of Connecticut regarding "Foreign Corporations" before entering upon the performance of the Contract.

Any non-resident Contractor is required to comply with the conditions set forth by the State Tax Commissioner relative to the provisions of Public Act No. 75-740, "An Act Concerning Bond Requirement for Non-resident Contractors for Purposes of Sales and Use Tax".

Public Act No. 75-740 requires a non-resident to deposit a sum equivalent to three percent (3%) of the total amount of the contract or a guarantee bond in the like amount with the State Tax Commissioner to secure payment of the sales and use tax. The Contractor shall obtain a certificate from the State Tax Commissioner that the requirements of Public Act No. 75-740 have been met before entering upon the performance of the Contract.

2.02.16 ADDRESS OF CONTRACTOR Each bidder shall indicate in his bid the address to which all notices, letters or other communications may be sent. This address may be changed only by proper delivery to the Town of written notice of such change, signed by the Contractor. The mailing or delivery by messenger of any notice, letter or communication to such designated address or to the office of the Contractor at or near the site of the work or to any attorneys or attorneys appointed by non-resident principals to a contract or by a "foreign" corporation, at any time including the full period of work under the Contract shall be deemed sufficient for any notice or service on the part of the Town in connection with the Contract or any part thereof.

2.02.17 SCOPE AND TERM OF INSURANCE The Contractor shall procure and maintain insurance coverage for the duration of the Contract, including any maintenance period provided therein, as required and specified in Exhibit A - Insurance Requirements.

2.02.18 INSURANCE CERTIFICATES Certificates of the insurance company or companies carrying the required insurance for the Contractor, on forms furnished by the Town, must be submitted in duplicate to the Town before the Contractor occupies any portion of the Town's property, rights-of-way or of any public highway or starts work on the site.

The insurance policy or policies shall be delivered to the Town, for the Town to examine and rule on acceptability of the policies and of any endorsements. All premiums or other insurance carriers' charges for such policies shall be paid by the Contractor.

Should any insurance described in any such certificate expire or be terminated during any period when the same is required under the Contract, the Purchasing Agent shall be notified immediately and such expired or terminated insurance must be replaced with new insurance and new certificates prior to date of such expiration or termination.

If the Town shall so request, the original policies of insurance or certified copies thereof shall be submitted by the Contractor to the Town for examination.

Failure to provide the required insurance, or to replace expired or terminated insurance, or to provide satisfactory certificates thereof, or to exhibit the policies if required, may, at the option of the Town, be held a willful violation of the Contract.

2.02.19 WITHDRAWAL OF OFFER A bid offer may be withdrawn only prior to the scheduled bid opening time for the particular project, provided the bidder first submits a written request for such withdrawal to the Division of Purchasing Services. Notice of acceptance of a bid shall not constitute rejection of any other bid.

2.02.20 LIMITATIONS ON SURETY BOND No surety bond for proposal guarantee, for performance of the Contract or for payment for labor and materials will be accepted if the amount of the bond exceeds any limit which the laws of Connecticut or the regulations of the Connecticut Insurance Department impose or for which the United States Treasury Department has qualified the surety, unless co-surety for the amount of any such excess is furnished, written by a surety company or companies qualifying hereunder for the respective amounts to be covered thereby.

2.02.21 REFERENCE SPECIFICATIONS Where any materials covered by ASTM, ASI, ACI, ConnDOT, MDC or any other these specifications are used, the product, practice or test procedures shall fully comply with these specifications, including their latest revisions, except where amended.

2.02.22 APPLICABLE PUBLIC ACTS The Contractor shall be responsible for complying with all statutory obligations connected with its operations such as, but not limited to, General Statutes S16-345 through S16-356 regarding operating rear underground utilities. See Section 5.04 "Utilities" of the General Conditions.

2.02.23 EQUAL OPPORTUNITY During the performance of this Contract, the Contractor agrees that he will not discriminate against any employee or

applicant for employment because of race, color, religion, age, sex, national origin or disability. The Contractor will take affirmative action to ensure that applicants are employed and that employees are treated during employment without regard to their race, color, religion, age, sex or national origin. Such action shall include, but not be limited to, the following: layoff or termination; rates of pay or other forms of compensation; and selection for training including apprenticeship.

The provisions of the following sub sections below shall not apply where the total cost of all work to be performed by contractors or sub-contractors in connection with this project is less than thirty -five hundred dollars; also this section shall not apply when the contractor has fewer than ten (10) employees.

(a) The Contractor will, in all solicitations or advertisements for employees, placed by or on behalf of the Contractor, state that all qualified applicants will receive consideration for employment without regard to race, color, religion, age, sex or national origin.

(b) The Contractor will comply with all provisions of the State of Connecticut Executive Order No. Three of June 16, 1971 and the guidelines and rules of State Labor Commissioner implementing Executive Order No. Three, and all amendments thereto.

(c) The Contractor will furnish all information and reports required by Executive Order No. Three of the State of Connecticut of June 16, 1971 and all amendments thereto, and by the rules, regulations and orders of the Labor Commissioner, or pursuant thereto, and will permit access to his books, records and accounts by the Labor Commissioner for purposes of investigation to ascertain compliance with such rules, regulations and orders.

(d) In the event of the Contractor's noncompliance with the Equal Opportunity clause of these bidding documents or with any of the Contract pursuant to these bidding documents, said rules, regulations or orders, may be canceled, terminated or suspended, in whole or in part, and the Contractor may be declared ineligible for further Town Contracts in accordance with procedures authorized in Executive Order No. Three of the State of Connecticut of June 16, 1971 and the guidelines and rules of State Labor Commissioner implementing Executive Order No. Three and all amendments thereto; and such other sanctions may be imposed and remedies invoked or as otherwise provided by law.

(e) The Contractor will include the provisions of this section and paragraphs (a) through (e) in every subcontract or purchase order, so that such provisions will be binding upon each sub-contractor or vendor. The Contractor will take such action with respect to any sub-contract or purchase order as the Town may direct as a means of enforcing such provisions, including sanctions for noncompliance: provided, however,

that in the event the Contractor becomes involved in, or is threatened with, litigation with a sub-contractor or vendor as a result of such direction by the Town, the Contractor may request the United States or the State of Connecticut to enter into such litigation to protect the interests of the United States, the State of Connecticut and the Town of West Hartford.

2.02.24 ENGINEERING AND INSPECTION CHARGES AND OVERTIME FEES The Contractor shall be required to reimburse the Town for engineering and inspection services performed by the Town on holidays (New Year's Day, Lincoln's Birthday, Martin Luther King Day, Washington's Birthday, Good Friday, Veterans Day, Memorial Day, Independence Day, Labor Day, Columbus Day, Thanksgiving Day and Christmas Day) or when employees are required to work in excess of 37.5 hours per week as a result of the Contractor's work schedule. The Contractor shall be charged at rates stated in section 2.01.10 of the Invitation To Bid.

2.03 BID FORMS

2.03.01 INFORMATION

Bid of _____ BIDDER,
(Name of Contractor)

_____
(Address of Contractor)

and _____
(Telephone Number of Contractor)

FOR THE **TRAFFIC SIGNAL LOOP DETECTORS BID# 6186F** AT THE TOWN OF WEST HARTFORD, CONNECTICUT.

To: Town of West Hartford
Chris Johnson
Purchasing Agent
Room 223
50 South Main Street
West Hartford, CT 06107

This Contractor proposes to furnish all labor, materials, and equipment, and all else whatsoever required to perform all work described in the contract Bidding Documents for **TRAFFIC SIGNAL LOOP DETECTORS BID# 6186F** as amended by the addendum noted below for the amounts shown herein under Schedule of Bids.

Addendum No._____ Dated_____

Addendum No._____ Dated_____

Addendum No._____ Dated_____

Addendum No._____ Dated_____

It is understood and agreed that the Owner has the privilege of rejecting any or all Bids and of waiving informality in any bid.

It is further understood and agreed that this bid shall be irrevocable for ninety (90) calendar days after bid receipt date.

2.03.02 SCHEDULE OF BID

(NOTE: All prices must be clearly written in ink or typed, in words as well as figures, for the entire Bid.)

BID ITEMS – Year 1

Item No.	Estimated Quantity	Brief Description and Price Bid in Words	Unit Price In Figures	Total In Figures
1.	1,000 L.F.	Loop Vehicle Detector and Sawcut – First Year - (May 1, 2011 to December 31, 2011) _____Dollars And_____Cents	$ _____	$ _____
2.	10 EA.	Concrete Handhole – First Year- (May 1, 2011 to December 31, 2011) _____Dollars And_____Cents	$_____	$_____
3.	100 L.F.	2" Rigid Metal Conduit in Trench – First Year (May 1, 2011 to December 31, 2011) _____Dollars And_____Cents	$_____	$_____

TOTAL OF PRECEEDING COMPETITIVE ITEMS, AS COMPUTED BY BIDDER USING THE QUANTITIES INDICATED ABOVE (Year 1 - ITEMS 1-3):

_____**Dollars and**_____**Cents**

$_____

BID ITEMS – Year 2

Item No.	Estimated Quantity	Brief Description and Price Bid in Words	Unit Price In Figures	Total In Figures
4.	1,000 L.F.	Loop Vehicle Detector and Sawcut – Second Year - (January 1, 2012 to December 31, 2012) _____Dollars And_____Cents	$_____	$_____
5.	10 EA.	Concrete Handhole – Second Year - (January 1, 2012 to December 31, 2012) _____Dollars And_____Cents	$_____	$_____
6.	100 L.F.	2" Rigid Metal Conduit in Trench – Second Year - (January 1, 2012 to December 31, 2012) _____Dollars And_____Cents	$_____	$_____

TOTAL OF PRECEEDING COMPETITIVE ITEMS, AS COMPUTED BY BIDDER USING THE QUANTITIES INDICATED ABOVE (Year 2 - ITEMS 1-3):

_____Dollars And_____Cents

$_____

BID ITEMS – Year 3

7.	1,000 L.F.	**Loop Vehicle Detector and Sawcut – Third Year - (January 1, 2013 to December 31, 2013)** _____Dollars And_____Cents	$_____	$_____
8.	10 EA.	**Concrete Handhole – Third Year - (January 1, 2013 to December 31, 2013)** _____Dollars And_____Cents	$_____	$_____
9.	100 L.F.	**2" Rigid Metal Conduit in Trench – Third Year - (January 1, 2013 to December 31, 2013)** _____Dollars And_____Cents	$_____	$_____

TOTAL OF PRECEEDING COMPETITIVE ITEMS, AS COMPUTED BY BIDDER USING THE QUANTITIES INDICATED ABOVE (Year 3 - ITEMS 1-3):

_____Dollars And_____Cents

$_____

Total Year One (5/1/11-12/31-11) $_____

Total Year Two (1/1/12-12/31/12) $_____

Total Year Three (1/1/13-12/31/13) $_____

Grand Total – All 3 Years $_____

It is understood that the various bid unit prices will control in any contract which may be awarded arising from this Bid; that the products obtained by multiplication of the above unit prices by estimated quantities, and the total thereof, have been inserted only for the convenience of the Bidder and to facilitate consideration of this and other Bids.

2.03.02.l CONTRACT TIME

The Contract shall remain in effect from **May 1, 2011** through **December 2014.** Individual projects within the scope of the Contract shall be assigned to the Contractor by addendum to this Contract and shall set forth start and completion dates for the individual project assigned. Such start and completion dates shall be strictly enforced.

2.03.03 BIDDER QUALIFICATIONS

If the Bidder is a Corporation, fill out:

The Bidder is a Corporation, organized under the laws of

_____, having its principal office at _____.

The Principal officers of said Corporation, with their titles and addresses, are as follows:

_____

_____

_____

Bid must be accompanied by either a Certified Check or a Bid Bond, as provided in the Invitation to Bid. If a check is deposited herein, fill out the following:

_____

(Name of Bank)

_____ _____

(Address of Bank) (Amount of Check)

Attached hereto is a form entitled "Summary of Work History". Sections 2.03.l2 and 2.03.13.

l. The Bidder is required to state that he has done work of a similar character to that included in the proposed Contract, and give references that will enable the Owner to judge his experience, ability to meet completion date, skill and business standing.

2. The Bidder is further required to complete the attached "Summary of Work History" for all jobs for which he has signed a construction contract within the past 36 months, providing the name and address of the Project, name and address of the Project Owner, name and address of the Project Architect, Contract amount, and time required for completion.

2.03.04 CERTIFICATE OF INSURANCE The Bidder is required to submit a Certificate of Insurance in amounts and types specified in Article 8.01A of the Exhibit section or provide a letter (see example located after bid signature page) from the Bidder's insurance agent or broker that such insurance is obtainable at the time of execution of the Agreement and that a Certificate of Insurance shall be provided to that effect not later than the date of Contract signing.

2.03.05 CONTRACT FORM The parties shall enter into a contract in substantially the same form as the attached subject to technical and other modifications as the parties mutually agree.

2.03.06 ANTI-COLLUSION No person or persons other than those named herein are interested in this Bid or in the Contract proposed to be taken. Said contract is made without any connection with any other person or persons making any bid for the same work and is in all respects fair and without collusion or fraud. No person acting for or employed by the Town of West Hartford may be directly or indirectly interested therein or in the supplies or works to which it relates, or will receive any part of the profit or any commission therefrom in any manner which is unethical or contrary to the best interest of the Town.

2.03.07 ANTI DISCRIMINATION The Contractor agrees and warrants that in the performance of this Contract he will not discriminate or permit discrimination against any person or group of persons on the grounds of sex, race, color, religion, physical impairment or national origin in any manner prohibited by the law of the United States, the State of Connecticut, or the Town of West Hartford.

2.03.08 SUPERVISION The Contractor shall employ full time on-the-job Project Superintendent as his representative.

2.03.09 ANTI TRUST ASSIGNMENT The Contractor and/or Subcontractor offers and agrees to assign to the Town of West Hartford and/or the West Hartford Board of Education all right, title and interest in all causes of action it may have under Section 4 of the Clayton Act, 15 U.S.C. Section 15, or under Connecticut General Statutes 35-24 et. seq., as amended, arising out of the purchase of services, property, or intangibles of any kind pursuant to this Contract, or Subcontracts thereunder. This assignment shall be made and become effective at the time the Town/Board awards or accepts such Contract, without further acknowledgment by the parties. In the alternative, at the option of the Town, the Contractor and/or Subcontractor agrees to pay to the Town its proportionate share of recoveries for anti-trust violations which relate to purchases pursuant to this Contract, or Subcontracts hereunder. The Contractor and/or Subcontractor agrees promptly to notify the purchasing Agent of the Town of West Hartford of suspected anti-trust violations and claims.

2.03.10 INDEMNIFICATION The Bidder is aware of and agrees that, if awarded this Contract, he is bound by the following indemnification language:

To the fullest extent permitted by law, the Contractor shall release, defend, indemnify, and hold harmless the Town of West Hartford, the West Hartford Board of Education, their respective boards, commissions, officers, officials, employees, agents, representatives, and servants from any and all suits, claims, losses, damages, costs (including without limitation reasonable attorneys' fees), compensation, penalties, fines, liabilities or judgments of any name or nature for:

.l Bodily injury, sickness, disease, or death; and/or

.2 Damage to or destruction of real and/or personal property; and/or

.3 Financial losses (including, without limitation, those caused by loss of use)

sustained by any person or concern, including officers, employees, agents, subcontractors, materialmen, or servants of the Town, the Board of Education, or the Contractor, or by the public, which is caused or alleged to have been caused in whole or in part by the negligent act(s) or omission(s) of the Contractor, or any Subcontractor, or materialmen, or anyone directly or indirectly employed by them in the performance of this Contract or from the inaccuracy of any representation or warranty contained in the Contract Documents. This indemnity shall not be affected by other portions of the Contract relating to insurance requirements.

To the fullest extent permitted by law, the Contractor shall release, defend, indemnify, and hold harmless the West Hartford Board of Education, the Town of West Hartford, their respective boards and commissions, officials, officers, employees, agents, representatives, and servants from any and all suits, claims, losses, damages, costs, (including without limitation reasonable attorneys' fees), compensation, penalties, fines, liabilities or judgments that may arise out of the failure of the Contractor, its officers, agents, Subcontractors, materialmen or anyone directly or indirectly employed by them to comply with any laws, statutes, ordinances, building codes, and rules and regulations of the United States of America, the State of Connecticut, the Town of West Hartford, the West Hartford Board of Education or their respective agencies. This undertaking shall not be affected by other portions of the contract relating to insurance requirements.

BIDDER:

_____
COMPANY

Bidder must sign. Failure to provide an original signature will result in rejection of the bid. ®

_____
SIGNATURE BY DULY AUTHORIZED
(SEAL)

_____
PRINT OR TYPE NAME

The bidder agrees that by affixing their signature to this request for bids, the authorized signatory grants approval to the Town of West Hartford to obtain third party credit reports for the purpose of assessing the financial capacity of the business entity tendering such bid to the Town.

_____
TITLE

_____
DATE

_____
ADDRESS

_____
TELEPHONE

_____
FAX #

_____
VENDOR FEIN #

BID FORMS TO BE SUBMITTED IN DUPLICATE

If you are not registered with the Town of West Hartford, please go to http://www.west-hartford.com/e-proc and select register. Only registered vendors can be awarded the contract.

2.03.11 INSURANCE AGENT CERTIFICATION OF INSURANCE COMPLIANCE

TO: Town of West Hartford
Chris Johnson
Purchasing Agent

FROM:

CLIENT:

DATE:

Dear Mr. Johnson:

In accordance with Section 2.03.04 of the "Bid Form", please be advised that my client currently has or will have by the date of the execution of the Agreement for this project, a Certificate of Insurance in amounts and types as specified in Article 8.01A of the Exhibit section and Exhibit "B" of the Contract Documents.

_____
Signature
Authorized Broker or Agent

3.00 LABOR REQUIREMENTS

3.01 Prevailing Wage Rates

3.01 PREVAILING WAGE RATES

3.01.01 The Contractor shall certify in writing and under oath to the Labor Commissioner the pay scale to be used by the Contractor and any Subcontractors. The provisions of this section shall not apply where the total cost of all work to be performed by ALL Contractors and Subcontractors in connection with new construction of any public works project is less than FOUR HUNDRED thousand dollars or where the total cost of all work to be performed by ALL Contractors and Subcontractors in connection with any remodeling, refinishing, refurbishing, rehabilitation, alteration or repair of any public works project is less than ONE HUNDRED thousand dollars. The Contractor shall fully comply with all provisions of Connecticut General Statutes (CGS) 31-53 and shall be subject to such sanctions mandated for violations of said Public Act.

3.01.02 The wages paid on an hourly basis to any mechanic, laborer or workman employed upon the work herein contracted to be done and the amount of payment or contribution paid or payable on behalf of each such employee to any employee welfare fund, as defined in CGS 31-53 shall be at a rate equal to the rate customary or prevailing for the same work in the same trade or occupation in the Town in which such public works project is being constructed. Any contractor who is not obligated by agreement to make payment or contribution on behalf of such employees to any such employee welfare fund shall pay to each employee as part of his wages the amount of payment or contribution for his classification on each pay day.

3.01.03 The contractor shall not be paid in accordance with the payment provisions of these Contract Bidding Documents unless the contractor is in full compliance with the mandates of CGS 31-53.

3.01.04 Bidders are further advised that if the initial consideration due and payable pursuant to the Contract exceeds the mandatory limits at which prevailing wages rates are required, then the contractor and any subcontractors shall pay the appropriate prevailing wages retroactive to the date of commencement of work on the project. The contractor shall not receive any additional compensation from the Owner as a result of an occurrence of the aforementioned event.

4.01 Contract

TOWN OF WEST HARTFORD STANDARD CONTRACT FOR PUBLIC WORKS

CONSTRUCTION OF:

made as of the _____ day of _____ in the year

of Two Thousand and Ten.

BETWEEN the Owner: Town of West Hartford (Town)
50 South Main Street
West Hartford, CT 06107

and the Contractor:

The Town and the Contractor agree as set forth below.

ARTICLE 1
THE CONTRACT DOCUMENTS

The Contract Documents consist of this Contract, those documents enumerated in the Table of Contents, and any drawings referred to therein, and all Addenda issued prior to and all Modifications issued after the execution of this Contract. An enumeration of the Contract Documents appears in Article 8.

ARTICLE 2
THE WORK

The Contractor shall perform all the Work required by the Contract Documents for

TRAFFIC SIGNAL LOOP DETECTORS , reference Bid no. 6186F.

ARTICLE 3
TIME OF COMMENCEMENT AND SUBSTANTIAL COMPLETION

The Town and the Contractor shall mutually agree to written schedule(s) pursuant to Section 2.01.08 of the Invitation to Bid, Section 5.13 of the General Conditions and Section 6.13 of the General Specifications pertaining to schedules and liquidated damages for failure to comply with such schedules establishing respective dates for the start and completion of various parts of the work. Each schedule shall be subject to review and may change from time to time as required during the progress of the work.

ARTICLE 4
CONTRACT SUM

The Town shall pay the Contractor in current funds for the performance of the Work, subject to additions and deductions by Change Order as provided in the Contract Documents, the Contract Sum of $_____.

The Contract Sum is determined as follows:
(State here the base bid or other lump sum amount, accepted alternates and unit prices as applicable)

ARTICLE 5
PROGRESS PAYMENTS

Based upon Applications for Payments submitted to the Engineer by the Contractor covering the prior calendar month, the Town shall make progress payments to the Contractor as provided in the Contract Bidding Documents, on account of the Contract Sum, in the following manner:

Not later than the tenth day of each month, the Contractor shall submit an Application for Payment to the Town. Otherwise valid Applications for Payment submitted after the tenth day of any month shall be paid together with the next timely-filed Application for Payment. In accordance with General Statutes 49-41b., ninety five percent (95%) of the amount of all labor, materials and equipment incorporated into the Work, and ninety five percent (95%) of the amount of all materials and equipment suitable stored at the site or at some other location agreed upon in writing shall be paid to the Contractor, subject to a reduction in amount for any payments previously made to the Contractor by the Town. Timely submitted Applications for Payment shall be paid on the first Friday following the fifteenth day of the month in which the Application is received by the Town.

The remaining five percent (5%) of the value of all labor, materials and equipment incorporated into the Work, or suitably stored at the site or at some other suitable agreeable location, (the retainage) shall be retained by the Town as security until the warranty period specified in the Contract Bidding Documents is completed. Any portion of the retainage may be released to the Contractor prior to the completion of the warranty period if, in the sole discretion of the Town Engineer, such release is appropriate.

ARTICLE 6
FINAL PAYMENT

Final payment, constituting the entire unpaid balance of the Contract Sum, shall be paid by the Owner to the Contractor when the work has been completed and the Contract fully performed.

ARTICLE 7
WARRANTY

In recognition of the need to determine that the work performed hereunder has been performed in such a manner which will permit the project to function correctly in all seasons, the Contractor warrants to the Town that for fifteen months from the date of completion, the work shall be free from defects not inherent in the quality required or permitted. All materials and equipment furnished under the Contract will conform to the requirements of the Contract Bidding Documents, be of good quality and new unless otherwise required or specified by the Contract Bidding Documents. Any work, materials and/or equipment which fails during the warranty period shall be repaired or replaced at the expense of the Contractor, unless such failure was caused by abuse beyond the control of the Contractor.

ARTICLE 8
MISCELLANEOUS PROVISIONS

Terms used in this Contract which are defined in the Conditions of the Contract shall have the same meanings designated in those Conditions.

The Contract Documents, which constitute the entire agreement between the Owner and the Contractor, are listed in Article 1 and except for Modifications, change orders or work directives issued after execution of this Contract, are enumerated as follows: Introductory Information, Information For Bidders, Labor Requirements, General Conditions, General Specifications, Technical Specifications, Exhibits A and B and the bid of TRAFFIC SIGNAL LOOP DETECTORS , Bid#6186F.

This Contract entered into as of the day and year first written above.

OWNER	CONTRACTOR
Town of West Hartford	_____
Chris Johnson	_____
Purchasing Agent	_____

5.00 GENERAL CONDITIONS

5.01 Town of West Hartford Rules & Specifications, etc.
5.02 Payments
5.03 State of Connecticut Standard Specifications
5.04 Utilities
5.05 Obligations of Contractor
5.06 Duties and Responsibilities of the Engineer
5.07 Assignment
5.08 Liability - Indemnity
5.09 Blasting Requirements
5.10 Avoidance of Abandonment
5.11 Delay of Work by Town and Work by Others
5.12 Defective Work
5.13 Time
5.14 Damages to be Paid Town; and Extension of Time
5.15 Quantities
5.16 Prices
5.17 Alterations and Additional Work
5.18 Additional Payments
5.19 Partial Estimates and Payments
5.20 Final Estimate
5.21 Withholding Payment
5.22 Waiver
5.23 Connecticut Occupational Safety and Health Act
5.24 Provisions Required by Law Deemed Inserted
5.25 Termination or Suspension of the Contract

5.01 TOWN OF WEST HARTFORD INFRASTRUCTURE RULES & SPECIFICATIONS All work, materials and services will be performed and furnished in accordance with requirements described in a separate pamphlet issued by the Town of West Hartford entitled, "Town of West Hartford, Rules and Specifications Regulating Curb and Walk Layers, Street Excavation, Street Construction and Sewer Installation 1995", as amended from time to time, plus the following additional provisions:

5.02 PAYMENTS Monthly payments up to 95% of the value of work to date will be made as described in Article 5 of the Standard Contract For Public Works.

After completion of all construction, except permanent repair of pavements, which it is not feasible to repair at that time, and any other work specifically exempted for the particular Contract, and except for maintenance of sewer, backfilled trenches, pavements, etc., as provided in Specifications, a final estimate will be prepared by the Engineer. From the total sum or sums due or to become due the Contractor, as computed in that final estimate, all deductions, withholdings or retainages provided elsewhere will be deducted including any sum or sums held to secure performance of work or delivery of material not yet completed, or to secure claims for which the Town may become liable.

The Town will retain 5% of the total of the Contract as computed in final estimates, as above, to secure the performance of all maintenance as required by Contract and Specifications. However, upon application by the Contractor and with permission of Surety, the Town may at any time retain less than 5% if it deems it advisable to do so. The sum or sums thus retained by the Town to secure performance of provisions will be paid after the period has expired and after all requirements of the and other provisions of the Contract and Specifications have been fully satisfied.

5.03 STATE OF CONNECTICUT STANDARD SPECIFICATIONS The following specifications will apply in addition to or as amendments to the Town of West Hartford Infrastructure Rules & Specifications (Divisions II and III only!):

"State of Connecticut Department of Transportation Standard Specifications for Roads, Bridges and Incidental Construction Form 816" as amended. Division I of document 816 does not apply.

When installing sewers in any one street or right-of-way, the main sewer and laterals shall be completed, leakage-tested, inspected, cleaned, and defects corrected where necessary, ready for use, and the backfilling, puddling, paving repair and cleanup work shall be done before work is started on any other street or section, unless otherwise approved by the Engineer.

5.04 UTILITIES

Protection of Other Utilities and Property Near Line of Sewer is amplified for this Project by the following:

The Contractor shall be responsible to make certain of the exact location of the mains, ducts, poles and services prior to excavation.

The utility mains, ducts, poles and services in the construction area where shown on the Project plans are at the approximate locations furnished by various utilities concerned. These locations are subject to possible errors in the source of the information and also errors in transcription.

Sections 16-345 thru 16-356 Connecticut General Statutes as amended makes it mandatory to notify utilities before digging with power equipment. The Contractor shall call 1-800-922-4455 (toll free), 7:00 a.m. to 6:00 p.m., Monday through Friday, at least forty-eight hours prior to beginning the excavation. This "one-call" service is provided by the utility companies.

Once the call is made, it is the Utilities' responsibility to analyze the site and identify and mark their underground facilities.

The following more commonly used utility numbers are listed for the Contractor's convenience in case additional specific information is needed:

Comcast of Connecticut, Inc. d/b/a Comcast/Hartford
Telephone 617-279-7485

Fiber Technologies Networks, LLC
Telephone 585-697-5107

Level 3 Communications, LLC
Telephone 720-888-6461

The Southern New England Telephone Company d/b/a AT&T Connecticut
Telephone 203-238-7407

Northeast Utilities Service Company
Telephone 860-665-2473

Connecticut Natural Gas Corporation
Telephone 860–727-3114

Tennessee Gas Pipeline Company
Telephone 860-763-6028

The Metropolitan District Commission (Water & Sanitary Sewer)
Telephone 860-278-7850 Ext. 3443

Town of West Hartford (Storm Sewers)
Telephone 860-561-8000

5.05 OBLIGATIONS OF CONTRACTOR The Contractor shall, at his own expense, do and perform all the work and furnish all services, tools, equipment, appliances, materials, plant labor and all that is necessary or proper for performing and completing the work described herein in the manner and within the time specified. All work to be performed and all materials to be furnished under this contract shall be performed, furnished and complete pursuant to and strictly in conformance with the Information for Bidders, the Project Drawings, sometimes referred to herein as the "plans", and the Contract Bidding Documents for this work, all of which are made a part hereof as if fully set forth herein.

5.05.0l The Contractor shall coordinate his operations with those of any other Contractors who may, under permit by the Town be working with properties controlled by the Municipality, shall avoid interference therewith, and shall cooperate in the arrangements for storage of materials.

5.05.02 The Contractor shall conduct his work so as to interfere as little as possible with private business and public travel. Wherever necessary or required, and at his own expense, (except as provided herein in the General Specifications Section 6.08.2 in regard to traffic officers), he shall maintain fences, furnish watchmen, maintain lights and take such other precautions as may be necessary to protect life and property.

5.05.03 The Contractor shall take all responsibility for the work done under this Contract for the protection of the work and for preventing injuries to persons and damage to property and utilities on or about the work. He shall in no way be relieved of his responsibility by any right of the Engineer to give permission or issue orders relating to any part of the work, by any such permission given or orders issued, or by failure of the Engineer to give such permission or issue such orders. The Contractor shall bear all losses resulting to him or to the Town on account of the quantity or character of the work, because the nature of the land in or on which the work is done is different from what was estimated, or expected, or on account of the weather, elements or other causes.

5.05.04 The Contractor shall conduct his operations so as not to damage existing structures or work installed either by him or by other contractors. In case of any such damage resulting from his own operations, he shall repair and make good the damaged portions at his own expense with the consent of the damaged party. In the event that consent is not given, the Contractor shall not be relieved thereby of liability for the damage caused.

5.05.05 The Contractor shall employ only competent employees to do the work, and, whenever the Engineer notifies the Contractor in writing that in his opinion any

employee on the work is incompetent, unfaithful, disorderly or otherwise unsatisfactory, or not employed in accordance with the provisions of this Contract, such employee shall be discharged from the work and shall not again be employed on it except with the consent of the Engineer.

5.05.06 If, in the opinion of the Engineer, the Contractor is not employing sufficient labor or equipment to complete the work described herein within the time specified, said Engineer may, after giving written notice, require said Contractor to employ such additional labor and equipment as may be necessary to enable said work to progress properly.

5.05.07 The Contractor shall not sell and shall neither permit nor suffer the introduction or use of substances which may impair an employee's ability to perform upon or about the work under this Project.

5.05.08 The Contractor shall keep himself fully informed of all state and national laws and municipal ordinances and regulations in any manner affecting those engaged or employed in the work, the materials used in the work or the conduct of the work, and of all such orders and decrees of bodies or tribunals having any jurisdiction or authority over the same. If any discrepancy for inconsistency is discovered in the project, and Contract Bidding Documents for this work in relation to any such law, ordinance, regulation, order or decree, he shall forthwith report the same to the Engineer in writing.

5.05.09 The Contractor shall take all precautions to prevent damage to the work by adverse climatic conditions or by water entering the work site over, across, or through the ground directly. In case of damage by storm or water, the Contractor shall make such repairs or replacements or rebuild such parts of the work as the Engineer may require in order that the finished work may be completed as required by the drawings and specifications.

5.05.10 The Contractor shall, at his own expense, take out all necessary permits from the state, municipal or other public authorities; shall give all notices required by law or ordinances; and shall post all bonds and pay all fees and charges incident to the due and lawful prosecution of the work covered by this Contract.

5.05.11 The Contractor recognizes that in the course of preparing plans and specifications, that unknown underground utilities will not be shown on the plans. In the event the Contractor encounters underground utilities which are not incorporated into the Contract Bidding Documents, it shall be the Contractor's responsibility to assure the utility is left as it was discovered.

5.05.12 The Contractor, working with its surety, shall use all reasonable efforts to provide safe passage through the site for the public, including both pedestrians and vehicles. The cost associated with such efforts shall be borne by the Contractor.

5.05.13 The Contractor shall provide a telephone number through which he/she may be contacted at any time.

5.06 DUTIES AND RESPONSIBILITIES OF THE ENGINEER All work done under the Contract and all materials furnished shall be to the satisfaction of and in accordance with the directions of the Town Engineer. All work shall conform to the detailed plans and the lines and grades furnished by or approved by the Engineer from time to time as the work proceeds.

5.06.01 The Engineer shall in all cases determine the amount, quality, acceptability and fitness of the several kinds of work and materials which are to be paid for under this Contract and shall decide all questions which may arise as to the fulfillment of this Contract and on the part of the Contractor. The determination and decision of the Engineer thereon shall be final and conclusive upon said Contractor, and such determination and decision, in case any question shall arise between the parties hereto touching this Contract, shall be a condition precedent to the right of the Contractor to receive any money under this Contract.

5.06.02 The Engineer shall make all necessary interpretations as to the meaning and intention of the Project Drawings, Technical and Contract Bidding Documents. He shall give all orders and directions contemplated therein or thereby, and in every case in which a difficult or unforeseen condition shall arise in the performance of the work required by the Contract.

5.06.03 If the Contractor considers any work demanded of him to be outside the requirements of the Contract, or if he considers any decision or determination of the Engineer to be unfair, he shall immediately, upon such work being demanded or such decision or determination being made, ask in writing for a work directive issued pursuant to paragraph 5.18.04, decision or determination. Such directive, decision or determination shall be given by the Engineer in writing, within two working days after the request therefore. Upon receipt of such written instruction, decision or determination, the Contractor shall proceed without delay to perform the work or conform to the instructions, decision or determination. Within ten (10) working days after receipt of the written instructions, decision or determination, the Contractor may file a written with the Town stating clearly and in detail his objections, the reasons therefore and the nature and amount of damages which the Engineer`s decision will cause him. A copy of such protest shall be filed with the Engineer at the same time as it is filed with the Division of Purchasing Services Manager. Unless the Contractor shall file such written protest within such 10-day working period, he shall be deemed to have waived all grounds for such protest and such damages and to have accepted the instruction, decision or determination of the Engineer as just and reasonable and as being within the scope of the Contractor's obligations under the Contract. On or before the 15th day of the month following performance of disputed work pursuant to this provision, the Contractor shall file with the Engineer, an itemized statement of all costs incurred in connection

therewith. A response to the written protest shall be rendered by the Town within thirty calendar days of receipt of said protest.

5.06.04 For purposes already specified and for any other purpose, the Town, the Engineer and their agents and employees may enter upon the work and the premises used by the Contractor and the Contractor shall provide safe and proper facilities therefore.

5.06.05 The Engineer shall be furnished with every reasonable facility for ascertaining that the work is in accordance with the requirements and intention of the Contract, even to the extent of uncovering or taking down portions of finished work. The Engineer shall be offered a reasonable opportunity to inspect the work above and below the ground before it is covered.

5.06.06 If the Engineer orders work to be uncovered and should the work thus exposed or examined prove satisfactory, the uncovering or taking down and the replacement of material and rebuilding of the work shall be considered as extra work unless the original work was done in the absence of the Engineer or his inspector without his written authorization, in which case that section of the General Specifications titled, "Work to Conform" shall govern. Should the work exposed or examined prove unsatisfactory, the uncovering, taking down, replacing and making good shall be at the expense of the Contractor.

5.06.07 The Engineer shall make all necessary explanations as to the meaning and intention of the drawings and specifications and shall give all necessary orders and directions.

5.06.08 The order or sequence of execution of the work and the general conduct of the work shall be subject to the approval of the Engineer who shall have authority to direct the order or sequence where public necessity or welfare shall require, which approval or direction shall, however, in no way affect the responsibility of the Contractor in the conduct of the work.

5.07 ASSIGNMENT The Contractor shall not assign, transfer, convey, sublet or otherwise dispose of or part with the control of this Contract or any part thereof, without the previous consent, in writing, of the Town. He shall not assign, by power of attorney or otherwise, any of the money to become due and payable under this Contract unless by and with the like consent in writing. Any such attempted assignment or subletting shall, at the option of said Town, forthwith work an avoidance of this Contract, or may be treated by said Town as null and void. The Contractor, may with prior consent of and subject to the approval in writing of the Engineer in each separate case, employ qualified subcontractors to supply material and perform parts of the work required herein. The employment of subcontractors shall not in any way relieve the Contractor of full responsibility for the performance of all parts of the work or the obligations and liabilities related thereto.

5.08 LIABILITY/INDEMNITY To the fullest extent permitted by law, the Contractor shall release, defend, indemnify, and hold harmless the Town of West Hartford and the West Hartford Board of Education, their respective boards, commissions, officers, officials, employees, agents, representatives, and servants from any and all suits, claims, losses, damages, costs (including without limitation reasonable attorneys' fees), compensation, penalties, fines, liabilities or judgments of any name or nature for:

.l Bodily injury, sickness, disease, or death; and/or

.2 Damage to or destruction of real and/or personal property; and/or

.3 Financial losses (including, without limitation, those caused by loss of use)

sustained by any such person or concern, including officers, employees agents, subcontractors, materialmen, or servants of the Town, the Board of Education, or the Contractor, or by the public, which is caused or alleged to have been caused in whole or in part by the negligent act(s) or omission(s) of the Contractor, or any Subcontractor, or materialmen, or anyone directly or indirectly employed by them arising from or related to the performance of this Contract or from the inaccuracy of any representation or warranty contained in the Contract Documents. This indemnity shall not be affected by other portions of the Contract relating to insurance requirements.

To the fullest extent permitted by law, the Contractor shall release, defend, indemnify, and hold harmless the West Hartford Board of Education and the Town of West Hartford, their respective boards and commissions, officials, officers, employees, agents, representatives, and servants from any and all suits, claims, losses, damages, costs, (including without limitation reasonable attorneys' fees), compensation, penalties, fines, liabilities or judgments that may arise out of the failure of the Contractor, its officers, agents, Subcontractors, materialmen or anyone directly or indirectly employed by them to comply with any laws, statutes, ordinances, building codes, and rules and regulations of the United States of America, the State of Connecticut, the Town of West Hartford, or their respective agencies. This undertaking shall not be affected by other portions of the contract relating to insurance requirements.

5.09 BLASTING REQUIREMENTS Prior to blasting by the Contractor, necessary approvals and insurance and documents specified by the Fire Marshall shall be obtained and filed with the Fire Marshall. Seismograph readings may be required by the Fire Marshall. Any expenses related to blasting, etc., shall be included in the fixed or unit price for rock removal. No additional claim for compensation shall be considered.

5.10 AVOIDANCE OR ABANDONMENT If the work to be done under the Contract shall be abandoned or suspended for any period of time without reasonable cause, and/or if the Contract, or any part thereof, shall be sublet or assigned without the previous written consent of the Town, or if at any time the Engineer shall be of opinion that the conditions herein specified as to the rate of progress are not fulfilled, or that the work or any part thereof is unnecessarily or unreasonably delayed, or that the Contractor has willfully violated or is willfully violating any of the provisions of the Contract, the Town may notify the Contractor to discontinue all work or any part thereof under the Contract, by a written notice to be served upon the Contractor or upon his duly appointed agent. Thereupon the Contractor shall discontinue such work, or such part thereof as the Town may designate, and the Town may thereupon, by separate contract or otherwise as it may determine, take such steps as the Engineer may deem necessary to protect completed portions of the work, or to protect persons or the property of others, or to continue and complete the work or such part thereof, and charge the entire expense of such protection or completion of the work, or part thereof, to the Contractor.

All expenses charged under this article shall be deducted and paid by the Town out of any moneys then due or to become due the Contractor under the Contract, or any part thereof, as if the same had been completed by him; and in such accounting the Town shall not be held to obtain the lowest figures for the work of completing the Contract, or any part thereof, or for insuring its proper completion, but all sums actually paid therefore shall be charged to the Contractor. In case the expenses so charged shall exceed the unpaid balance of the sum which would have been payable under this Contract, if the same had been completed by the Contractor, the Contractor shall pay the amount of the excess to the Town.

5.11 DELAY OF WORK Delay of work by Town, and work by others when any particular part of the work is being carried on by the Town, by other contractors to the Town or otherwise, under the provisions of this article, the Contractor shall continue the remainder of the work in conformity with the terms of the Contract and in such manner as in no way to hinder or interfere with the persons or workmen employed, as above provided, by the Town, by other contractors or otherwise. Neither notice to the Contractor to discontinue work on any part of the Contract, nor the discontinuance thereof by the Contractor, nor the failure of the Engineer to take steps as permitted above for protection of the work or persons or the property of others shall in any way diminish the liability of the Contractor to indemnify and save harmless the Town or others named therewith, as provided hereinbefore, unless and until the Town shall have contracted with other parties to complete the work or part thereof and then only with respect to such work or parts thereof as the Town may have so contracted.

5.12 DEFECTIVE WORK The inspection of the work shall not relieve the Contractor of his contractual obligations as herein prescribed, and defective work shall be made good and unsuitable materials may be rejected not withstanding that such defects in work or materials may have been previously overlooked by the Engineer and such work or materials accepted or estimated for payment. If the work, or any part thereof, shall be found defective at any time before the final acceptance of the whole work, the Contractor forthwith shall make good such defect in a manner satisfactory to the Engineer, and if any materials brought upon the site for use in the work or selected for the same, shall be condemned by the Engineer as unsuitable or not in conformity with the Specifications, the Contractor shall forthwith remove such materials from the vicinity of the work. If the Contractor shall fail to replace any defective work after reasonable notice, the Engineer may cause such defective work to be replaced and the expense thereof shall be deducted from the amount to be paid the Contractor. In case the nature of the defects is such that it is not expedient to have them corrected, or if there have been omissions in the work, the Contractor shall pay the Town and the Engineer shall have the right to deduct from the amount due the Contractor on the final settlement of the accounts, such sums of money as the Engineer considers a proper equivalent for the difference between the value of the materials or work specified and those furnished, or a proper equivalent for the damage.

5.13 TIME The Contractor shall commence the work within ten (10) days of the executing of the Contract, unless some other definite time for beginning work shall have been stated in the Invitation to Bid.

5.13.01 Such time of starting may be postponed by written agreement between the Town and the Contractor because of unexpected delays in receipt of materials and equipment, if the season is unsuitable for commencement of the work, or because of any other contingency clearly beyond the control or responsibility of the Contractor.

5.13.02 The Contractor further agrees that he will prosecute the work diligently and in accordance with any progress schedules which may be required in the Specifications and will complete all work within the time stipulated in the Invitation to Bid or elsewhere.

5.13.03 No work shall be done at night, before 7:00 a.m., after one hour after sundown, or on Sundays except (1) usual protective work, such as pumping and tending of lights and fires, (2) work done in case of emergency threatening injury to persons or to property.

5.13.04 The rate of progress shall be such that the whole work shall be performed in accordance with the terms of the Contract before the expiration of the time limit stipulated in the Invitation to Bid, unless and except as any part may be delayed under the provisions of the Contract.

5.I3.05 It is agreed that the rate of progress herein required has intentionally been made slow enough to allow for the ordinary delays incident to construction work of this character. No extension of time will be made for ordinary delays, inclement ordinary weather and accidents, and the occurrence of such will not relieve the Contractor from the necessity of maintaining this rate of progress.

5.13.06 If delays are caused by acts of God, acts of government or state, strikes, extra work or other contingencies clearly beyond the control or responsibility of the Contractor, the Contractor shall be entitled to so much additional time wherein to perform and complete the Contract on his part as the Engineer shall certify in writing to be just.

5.13.07 The Town may delay the beginning of the work or any part thereof if the necessary lands or rights-of-way for such work shall not have been obtained. The Contractor shall have no claim for damages on account of such delay but shall be entitled to so much additional time wherein to perform and complete the Contract on his part as the Engineer shall certify in writing to be just.

5.I3.08 When extra work is ordered at any time during the progress of the work which requires, in the opinion of the Engineer, an unavoidable increase of time for the completion of the Contract, a suitable extension of the time for completion shall be made.

5.13.09 No extension of time shall be granted unless, in the opinion of the Engineer, the Contractor was delayed by reasons clearly beyond his control and has taken every reasonable step to obviate or minimize such delay.

5.14 DAMAGES TO BE PAID TOWN AND EXTENSION OF TIME The Contractor shall pay to the Town for each and every day, including Sundays and legal holidays, that he shall be in default in completing the entire work to be done under this Contract, or any essential part thereof for which there may be provided a separate time limit, the sum named on the Invitation to Bid or elsewhere in the Contract Bidding Documents, which sum is hereby agreed upon, not as a penalty, but as liquidated damages which the Town will daily suffer by reason of such default.

5.14.01 The Town shall have the right to deduct the amount of such damages from any moneys due or to become due the Contractor under the Contract. The Town, however, shall have the discretionary right to extend the time for the completion of the amount of work as aforesaid. In each such case, the Town shall be fully authorized and empowered to deduct from any estimate of the amount due the Contractor under the provisions of the Contract the amount of any damages determined as hereinbefore stipulated. The Contractor shall be in default in the completion of the work beyond the date to which the time for said completion shall have been extended by the Town. Permitting the Contractor to continue and finish the work or any part of it, after the time fixed for its completion, or after the date to which the time for completion may have been extended, shall in

no way operate as a waiver on the part of the Town of any of its rights under this Contract. The Contractor shall obtain the written consent of the surety for extension of time, if any is required for the completion of the work. No claim for an extension of time for any reason shall be allowed unless, within three calendar days after such delays occurs, notice in writing of the fact of said delay, its causes and the extension claimed shall have been given by the Contractor to the Engineer.

5.15 QUANTITIES The quantities named in the Bid Form for the various items of work to be done and materials to be furnished under the Contract are given only for the purpose of comparing, on a uniform basis, the bids offered for the work under this Contract. The Town is not to be held responsible if it is found, in the performance of the work, that any or all of the said estimated quantities are not even approximately correct. The Contractor shall have no claim for anticipated profits, or for loss of profits, or for increase in prices bid because of a difference between the quantities of the various items of work actually done or materials actually delivered and the estimated quantities stated in the Bid Form.

5.16 PRICES The Town shall pay, and the Contractor shall receive, as full compensation for everything furnished and done by the Contractor under the Contract, including all work required but not including the items hereinafter mentioned. The bid price shall include all loss or damage arising out of the nature of the work aforesaid, or from the action of the elements, or from any unforeseen obstruction of difficulty encountered in the prosecution of the work, and all risk of every description connected with the work, and all expenses incurred by or in consequence of the suspension or discontinuance of the work as herein specified, and assuming all duties and liabilities required herein, and well and faithfully completing the work, and the whole thereof, as provided in the Contract. The sum or sums named in the Bid for this work, referred to hereinbefore and made a part hereof, are subject to such retainages, deductions or other provisions affecting payment as may be provided for herein, and in accordance with, and limited by any interpretative clauses or specific lists of inclusions or exclusions which may appear in the Bidding Documents or shown on the Project Drawings.

5.17 ALTERATIONS AND ADDITIONAL WORK It is distinctly agreed and understood that any changes made in the Bidding Document for this work, whether such changes increase or decrease the amount thereof, or any change in the manner, time or amount of payments made by the Town to the Contractor, shall in no way annul, release or in any way affect the liability and surety on surety bonds given by the Contractor.

5.I7.01 The Engineer may, without notice or surety, order any additional work not otherwise provided for herein or may order any work eliminated, in a manner not inconsistent with the general features of the work, or may make alterations in the line, grade, plan, form, position, dimensions or materials of the work, or any part thereof, either before or after the commencement of construction. Any such modification to the contract shall be evidenced by the execution of a change

order form signed by the Engineer and Contractor. In addition, where the change affects the contract price it shall be approved by the Division of Purchasing Services Manager. If such alterations diminish the quantity of work to be done, the contract amount shall be adjusted in accordance with the quantity of work stipulated and the unit price bid. Such decrease in the amount of work shall not warrant any claim for damages or for anticipated profits on the work that may be dispensed with. If they increase the amount of work, such increase shall be paid for according to the quantity actually done and at the unit price stipulated for such work under this Contract or where there is no unit price at a price that is mutually agreeable to the Town and the Contractor.

5.18 ADDITIONAL PAYMENTS If, in the opinion of the Engineer, such alterations result in increased or decreased cost to the Contractor, a fair and equitable sum therefore, to be agreed upon in writing by the Contractor, the Engineer and Division of Purchasing Services Manager before such alteration is made, shall be added to or deducted from the contract price as the case may be. One of the following methods shall be used to adjust the contract price:

At the unit prices stated in the Bid or in absence the change shall be computed as follow:

.0.l A mutually acceptable lump sum, properly itemized and supported by sufficient substantiating data to permit evaluation; or

.0.2 Unit prices stated in the Contract Documents or subsequently agreed upon; or

.0.3 Cost, to be determined as follows:

.0l The cost of labor performed and material used by the Contractor with his own forces.

.02 The cost of Workmen's Compensation, Federal Social Security, and Connecticut Unemployment Compensation in established rates, actual additional cost of payment and performance bonds.

.03 Actual cost of rental rates for equipment employed and used directly on the work.

.04 Fifteen percent (15%) of the total cost of the three items enumerated in Sections 5.l8.03.0l-.03 above, for overhead, superintendence and profit, however, if the work to be performed results in a credit to the Owner, no percentage of overhead and profit will apply.

.05 On work to be performed by a sub-contractor, the Contractor's allowance is to be ten percent (l0%) applied to total cost of sub-contractor's work, including his allowance as per paragraph 5.l8.03.07.

.06 On any changes involving the Contractor, sub-contractor or any contractor of theirs, their total cost and/or omissions shall be combined as one before the application of the percentage allowed for the Contractor's overhead profit in accordance with paragraph 5.l8.03.04.05.

.07 On work to be performed by a sub-contractor, the sub-contractor's allowance is to be fifteen (15%) for his overhead and profit applied to paragraphs 5.l8.03.0l.03 above, as with the principal contractor.

.08 The Contractor, when performing work under paragraphs 5.18.03 shall, when requested, promptly furnish in a form satisfactory to the Owner, itemized statements of the cost of the work so ordered, including but not limited to, certified payrolls and copies of accounts, bills and vouchers to substantiate the above estimates.

.0.4 If the Contractor claims compensation for additional work, for any alleged damage sustained as a result of the Engineer's order to proceed with such work, or if the Contractor and Engineer disagree as to any term otherwise necessary to prepare a change order, the Engineer shall prepare a work change directive to permit the project to continue. The Contractor shall, within ten (l0) working days after receipt of a work directive change, make a written statement to the Engineer justifying the claim. A response to the Contractor shall be provided by the Engineer within 30 days thereafter. On or before the fifteenth (15th) day of the month succeeding that in which any such additional work shall have been done, or any such damage shall have been sustained, the Contractor shall file with the Engineer an itemized statement of the details and amount of such work or damage. Unless the Contractor complies strictly with the items of this provision, his claim for compensation shall be forfeited and invalid, and he shall not be entitled to payment on account of any such work or damage. In the event that a change in price is agreed upon, the change shall be calculated using one of the methods set forth in Paragraphs 5.l8.0l.03.

.0.5 Upon receipt of a work change directive, the Contractor shall promptly proceed with the change in the work involved and advise the method, if any, provided in the work change directive for determining the proposed adjustment in the Contract price or Contract time.

.0.6 A work change directive signed by the Contractor indicates the agreement of the Contractor therewith, including adjustment in the Contract price or the Contract time or the method for determining them. Such agreement shall be effective immediately and shall be recorded as a change order.

.0.7 If the Contractor disagrees with the method for adjustment of the Contract price used by the Engineer, the method provided in Paragraph 2.18.3 shall be used.

.0.8 Pending final determination of cost, amounts not in dispute may be included in applications for payment. The amount of credit to be allowed by the Contractor to the Town for a deletion or change which results in a net decrease in the Contract price shall be actual net cost as confirmed by the Engineer. When both additions and credits covering related work or substitutions are involved in a change, the allowance for overhead and profit shall be figured on the basis of net increase, if any, with respect to that change.

.0.9 If the Town and Contractor do not agree with the adjustment in contract time or the method for determining it, the Engineer's determination of the adjustment shall be final.

.10 When the Town and the Contractor agree concerning adjustments in contract price or contract time, or otherwise reach agreement upon adjustments to the contract, such agreement shall be effective immediately and shall be recorded by preparation of an appropriate change order.

.11 The Engineer has the authority to order minor changes in the work not involving adjustments to the contract price or contract time. Such changes shall be effected by written change order and shall be binding on the Town and the Contractor. The Contractor shall carry out such written orders promptly.

5.19 PARTIAL ESTIMATES AND PAYMENTS The Contractor shall, once in each calendar month, make an estimate in writing of the total amount of work done and the materials delivered and accepted to the time of such estimate, and the value thereof. The Town shall retain five (5%) percent of such estimated value as part security for the fulfillment of this Contract and shall pay monthly to the Contractor while carrying on the work, except as provided below, the balance not retained as aforesaid, after deducting from all previous payments and all sums to be deducted, kept or retained under the provisions of this Contract. It is agreed that such periodic estimates with respect to quantities are approximate only and are subject to adjustment on the final estimate. No such estimate or payment shall be required to be made when, in the judgment of the Engineer, the total value of work done since the preceding estimate amounts to less than five (5%) percent of the total bid price. Payment may at any time be withheld if the work is not proceeding in accordance with the Contract. The Town may, if it deems it expedient to do so, cause estimates and payments to be made more frequently than once in each month, but in no circumstance shall the Town be required to do so.

5.I9.01 The Town may, if it deems it desirable and expedient to do so, retain temporarily or for the duration of this Contract a smaller amount than as aforesaid. In case such payments are made, the Town may, at any time cause further payments to be withheld until the full five (5%) percent reserve is re-established. No portion of the retained percentage will be released until there has been filed with the Town, a certificate signed by a responsible and authorized officer of the surety company, which has furnished the surety bonds, that said company approves of such release and that such payment will in no way annul, release or in any affect the liability and surety on the bond given by the Contractor. The Town may pay the Contractor from time to time during any maintenance period, which may be specified, such portion of any reserve therefore, which it deems prudent or desirable to pay.

5.19.02 If the Contractor does not concur with and consent to the estimates of quantities, the classifications, the sums due or any other elements of the estimates prepared by the Engineer or does not agree with the interpretations of the meaning or requirements of the Contract with accompanying plans and documents as made evident to him either in estimates by the Engineer of the value of work or otherwise, then the Contractor shall at once, notify the Engineer in writing in accordance with Paragraph 5.06.03 of this section of any such disagreement or of any alleged error or omission and of any claim resulting from and of the amount and details thereof. Prompt delivery of such written notice or notices to the Engineer as provided herein shall be a condition precedent to the right of the Contractor, or any party claiming for or under him, to any additional compensation over and above that estimated by the Engineer as due the Contractor and set forth in the Engineer's periodic estimates for payment. Unless and except as notice was given to the Engineer as aforesaid, the Contractor shall have no cause of action against the Town for such claim.

5.19.03 It is further agreed that the contract pursuant to these Bidding Documents is an entire contract for one whole and complete project and that no partial payments on account by the Town nor the presence of the Engineer or inspectors or their superintendence or inspections of work or material shall constitute an acceptance of any part of the work before its entire completion and final acceptance. However, nothing in the Contract shall be construed to vest in the Contractor any right or property interest in materials used. After they shall have been attached or affixed to the work or the soil or estimated for payment, but all such materials shall, upon being so attached, affixed or estimated for payment, become the property of the Town.

5.20 FINAL ESTIMATE The Engineer shall, as soon as practicable after the completion of all work under the Contract, except for any maintenance period and any permanent repairs and replacement of paving cuts which may be specified to be done at a later date, make a final estimate of the amount of work done under the Contract and the value of such work. The Town shall retain 5%

of the sum or sums specified as the estimated value thereof as part security for the fulfillment by the Contractor of any maintenance and other similar provisions of the Bidding Documents together with any other sum or sums to be retained as provided elsewhere herein.

5.20.01 The Contractor shall warranty the whole of the work in good repair for a period of not less than fifteen (15) months from the date of completion of the entire work. The Contractor shall repair promptly all failure in the construction and operation of such work and appurtenances which may occur before the expiration of such period and all defects, settlements and irregularities of the work and appurtenances, sewers and drains, pipes, mains or conduits, curbs, gutters, sidewalks, street surfacing, land turfing or of any structures, occurring before the expiration of such period and caused or affected by work under the Contract. Within thirty (30) days after the expiration of the period for any maintenance work which may be specified, the Town shall pay any retainage made for such work, provided that the whole of the work executed by the Contractor is at that time in conformity with the requirements of this Contract; if not, then as soon thereafter as the work shall be made to conform thereto, and also provided all claims for which the Town may become liable, and the Contractor liable to reimburse the Town therefore, have been paid or adequate security therefore has been furnished to the Town. The work hereunder shall not be considered as completed and finally accepted unless and until evidenced by final certificate of the Engineer and release of retainage.

5.20.02 No persons or corporations other than the Contractor shall have any interest hereunder and no claim shall be made or be valid and neither the Town nor any member or agent thereof shall be liable for, or be held to the last payment made as aforesaid or as provided elsewhere herein shall operate as and shall be a release to the Town, and every agent thereof, from all claim and liability to the Contractor for anything done or furnished for or relating to the work or for any act of neglect of the Town or of any person relating to or affecting the work, except the claim against the Town for the remainder, should there be amounts kept or retained as provided elsewhere herein.

5.21 WITHHOLDING PAYMENT The Town may, at its discretion, withhold any monies which would otherwise be payable at any time hereunder and apply the same, or so much as may be necessary therefor, to the payment of any expenses, losses or damages incurred by the Town and determined as herein provided and may retain related to the Contract or with thereunder so much of such moneys as the Town shall be required to settle all claims against the Town and its officers and agents arising due to the Contract and included in the duties and liabilities assumed hereunder by the Contractor; and all claims for labor on the work; and also all claims for materials used in the work.

The Town may make such settlements and apply thereto any moneys retained under the Contract. If the monies withheld under this Contract are insufficient to pay the sums found by the Town to be due under the claims for labor and

materials, the Town may, at its discretion, pay the same and the Contractor or his surety shall repay to the Town all sums so paid out.

5.22 WAIVER Neither the inspection by the Town, nor of the Engineer, nor their employees, nor any order, measurement or certificate by the Engineer, nor any order by the Town for the payment of money, nor any payment for nonacceptance of the whole or possession taken by the Town or its employees, shall operate as a waiver of any provision of the Contract, or of any power herein reserved to the Town, or any right to damages herein provided, nor shall any waiver of any breach of the Contract be held to be a waiver of any other or subsequent breach. Any remedy provided in the Contract shall be taken and construed as cumulative; that is, in addition to each and every other remedy herein provided.

5.22.01 In the event of any unavoidable cause beyond the control of the parties, whether natural or man-made, which renders the performance of this contract impossible, the contract shall be terminated. Such occurrences shall include, without limitation, death of the Contractor (in the event that the Contractor is a sole proprietor); destruction of all, or a major portion of the Contractor's equipment; legal order by a court of competent jurisdiction, or referendum barring performance of the contract; war, famine, flood, plague, pestilence or act of God. Any amounts due to either prior to the occurrence which renders performance impossible shall be paid, but no further sums shall be due from either party to the other, by way of damages for the termination of the contract.

5.23 CONNECTICUT OCCUPATIONAL SAFETY AND HEALTH ACT The Contractor shall keep himself fully informed and currently up to date regarding all laws, rules, standards and regulations in any manner affecting the safety of any employees relative to the Contract under the Connecticut Occupational Safety and Health Act (Public Act 73-379 as may be amended).

5.23.01 The Engineer or his authorized representatives may order any violations of the standards promulgated by the Connecticut Occupational Safety and Health Act corrected immediately as they pertain to the safety and health of Town employees in the performance of their duties relative to the Contract. Failure of the Contractor to correct the violation(s) shall be cause to order all work under the Contract to be suspended. Such an order shall not be cause for a claim by the Contractor for lost time and or other damage or for extension of time of completion of the Contract. Furthermore, failure of the Contractor to correct the violations(s) after a reasonable time shall be grounds for the Town to terminate the Contract and in this event the Contractor shall be liable for all damages which arise as a result of said termination.

5.23.02 Nothing in this section shall be construed to relieve the Contractor of his responsibilities as an employer under the act. Any fines or penalties imposed on the Town resulting from violations of the standards promulgated by the act shall be paid by the Contractor and may be deducted from moneys due the Contractor under the Contract.

The failure of the Engineer to order a violation of the standards to be corrected shall not constitute a waiver of such violation and the Contractor may be ordered to correct violations subsequently at any time.

5.23.03 The Contractor shall comply with Section 12-43 of the Connecticut General Statutes as may be amended.

Sec. 12-43. Property of nonresidents. All owners of real estate, or of tangible personal property located in any town for three months or more during the assessment year immediately preceding any assessment day, who are nonresidents of such town, shall file lists of such real estate and personal property with the assessors of the town in which the same is located on such assessment day, if located in such town for three months or more in such year, otherwise, in the town in which such property is located for the three months or more in such year nearest to such assessment day, under the same provisions as apply to residents, and such personal property shall not be liable to taxation in any other town in this state. The list of each assessors shall mail to each nonresident, or to his attorney or agent having custody of his taxable property, at least fifteen days before the expiration of the time for filing lists, blank forms for filing lists of such property. The lists of taxable property of nonresidents shall be arranged in alphabetical order and separate from the lists of residents, provided no such separation shall be necessary in any town the board of assessors of which, upon the request of its property tax collector, has made rules and regulations approved by the secretary of the office of policy and management setting up an alternative method of arrangement.

5.24 PROVISIONS REQUIRED BY LAW DEEMED INSERTED Each and every provision of law and clause required by law to be inserted in the Contract shall be deemed to be inserted herein and the Contract shall be read and enforced as though they were included herein. If through mistake or otherwise, any such provision is not inserted or is not correctly inserted, then upon the application of either party the Contract shall forthwith be physically amended to make such insertion.

5.25 TERMINATION OR SUSPENSION OF THE CONTRACT The Contractor may terminate the Contract if the Work is stopped for a period of 60 days through no act or fault of the Contractor or a Subcontractor, Subcontractor or their agents or employees or any other persons performing portions of the Work under contract with the Contractor, for any of the following reasons:

5.25.01 Issuance of an order of a court or other public authority having jurisdiction which directs the Contractor to stop the Work, or terminate the Contract;

5.25.02 An act of government, such as a declaration of national emergency, which renders performance impossible by making material or properly skilled workers unavailable;

5.25.03 Failure of the Engineer to issue a Certificate for Payment in a timely fashion when the Contractor has not been notified of the reason for withholding certification;

5.25.04 Failure of the Town to make payment within the time stated in the contract Documents; or

5.25.05 Repeated suspensions, delays or interruptions by the Town occur constituting, in the aggregate, more than 100 percent of the total number of days scheduled for completion, or 120 days in any 365 day period, whichever is less.

5.25.06 If one of the above reasons exists, the Contractor may, upon seven days written notice to the Town, terminate the Contract and recover from the Town payment for work executed.

5.25.07 If the work is stopped for a period of 60 consecutive days through no act or fault of the Contractor or a Subcontractor or their agents or employees or any other persons performing portions of the work under contract with the Contractor because the Town has persistently failed to fulfill its obligations under the Contract Documents with respect to matters important to the progress of the Work, the Contractor may, upon seven days written notice to the Town, terminate the contract and recover from the Town as provided in subparagraph 1B above.

5.25.08 The Town may terminate the Contract for any of the following causes:

5.25.09 If the Contractor shall institute or consent to proceedings requesting relief or arrangement under the Federal Bankruptcy Act or any similar or applicable federal or state law, or if a petition under any federal or state bankruptcy or insolvency law is filed against the Contractor and such petition is not dismissed within sixty (60) days from the date of said filing, or if the Contractor admits in writing his inability to pay his debts generally as they become due, or if he makes a general assignment for the benefit of his creditors, or if a receiver, liquidator, trustee or assignee is appointed on account of his bankruptcy or insolvency; or

5.25.10 If a receiver of all or any substantial portion of the Contractor's properties is appointed; or

5.25.11 If the Contractor abandons the Work by failing to report to the site of the Work without prior approval of the Engineer for a period of 3 consecutive work days at any time after the scheduled commencement date for the Work and before the Work is completed; or

5.25.12 If the Contractor fails to prosecute the Work promptly and diligently, except in cases for which extension of time is provided; or

5.25.13 If the Contractor fails or refuses to supply enough properly skilled workers or proper materials for the Work; or

5.25.14 If the Contractor submits an Application for Payment, sworn statement, waiver of lien, affidavit or document or any nature whatsoever which is intentionally falsified; or

5.25.15 If the Contractor fails to make prompt payment to subcontractors or for materials or labor or otherwise breaches his obligations under any Subcontract with a Subcontractor; or

5.25.16 If a mechanic's or materialman's lien or notice of lien is filed against any part of the Work or the site of the Project and is not promptly bonded or insured over by the Contractor in a manner satisfactory to the Owner; or

5.25.17 If the Contractor disregards any law, statute, ordinance, rule, regulation or order of any governmental body or public or quasi-public authority having jurisdiction of the Work or the site of the Project; or

5.25.18 If the Contractor otherwise substantively violates any provision of the Contract Documents.

5.25.19 When any of the above reasons exist, the Town, upon certification by the Engineer that sufficient cause exists to justify such action, may without prejudice to any other rights or remedies which it may have, and after giving the Contractor and the Contractor's surety, if any, seven days' written notice, terminate the Contract and may, subject to any prior rights of the surety;

5.25.20 take possession of the site and all materials, equipment, tools, and construction equipment and machinery thereon owned by the Contractor and may request that the Contractor remove any part or all of his equipment, machinery, and supplies from the site of the Project within seven (7) days from the date of such request, and in the event of Contractor's failure to do so, may remove or store such equipment, machinery and supplies at the Contractor's expense.

5.25.21 accept assignment of subcontracts; and

5.25.22 finish the Work by whatever reasonable method the Town may deem expedient, including, without limitation, the use of Town employees and equipment.

5.25.23 When the Town terminates the Contract for one of the reasons stated in subsection 2, the Contractor shall not be entitled to receive further payment until the Work is finished

5.25.24 If the unpaid balance of the Contract Sum exceeds all costs to the Town of completing the Work, then the Contractor shall be paid for all Work performed by the Contractor to the date of termination. If the costs to the Town of

completing the Work exceed such unpaid balance, the Contractor shall pay the difference to the Town immediately upon the Town's demand. The costs to the Town of completing the Work shall include (but not be limited to) the cost of any additional architectural, managerial and administrative services required thereby; any costs incurred in retaining another contractor or other subcontractors; the cost using Town employees to complete the work, including the costs of any workers' compensation claims which may result from the completion of the work; any additional interest or fees which the Owner must pay by reason of delay in completion of the Work; attorney's fees and expenses which the Town may incur by reason of completing the Work or any delay thereof. The amount, if any, to be paid to the Contractor shall be certified by the Engineer, upon application, and this obligation shall survive the termination of the Contract.

6.00 GENERAL SPECIFICATIONS

6.01 Handling and Distribution
6.02 Materials - Samples - Inspection - Approval
6.03 Shop and Working Drawings
6.04 Occupying Private Land
6.05 Interference With and Protection of Streets
6.06 Storage of Materials and Equipment
6.07 Insufficiency of Safety Precautions
6.08 Traffic Control
6.09 Sanitary Regulations
6.10 Lines, Grades and Measurements
6.11 Work to Conform
6.12 Computation of Quantities
6.13 Planning and Progress Schedules
6.14 Precautions Against Adverse Weather
6.15 Definitions
6.16 Abbreviations

6.01 HANDLING AND DISTRIBUTION The Contractor shall, at his own expense handle, haul and distribute all materials and all surplus materials on the different portions of the work, as necessary. He shall provide suitable and adequate storage area for materials during the progress of the work and be responsible for loss of, or damage to, materials furnished or accepted by him, until the final acceptance of the work.

Storage charges and demurrage charges by transportation companies and vendors which result from delays in handling shall be borne by the Contractor.

6.02 MATERIALS -SAMPLES -INSPECTION -APPROVAL Unless otherwise indicated on the drawings or specified, only new materials shall be incorporated in the work. All materials furnished by the Contractor to be incorporated in the work shall be subject to the inspection and approval of the Engineer and the or their duly appointed representative.

6.02.01 As soon as possible after the formal execution of the Contract, the Contractor shall submit to the Engineer and the Engineer's duly appointed representative, the names and addresses of the manufacturers and suppliers of all materials he proposes to incorporate into the work. When shop and working drawings are required as specified below, such information shall be submitted prior to the submittal of the drawings so that the Engineer and the Engineer's duly appointed representative may consider and approve or disapprove the manufacturer and/or the supplier as to their ability to furnish a product meeting the specifications, subject to final approval of the particular material. As requested, the Contractor shall also submit data relating to the materials he proposed to incorporate into the work, in sufficient detail to enable the Engineer the Engineer's duly appointed representative to identify the particular product in question and to form an opinion as to its conformity to the Contract requirements. Such data shall be submitted in the manner similar to that specified for shop and working drawings.

6.02.02 Facilities and labor for the handling and inspection of all materials shall be furnished by the Contractor. Defective materials shall be removed immediately from the site of the work.

6.02.03 If the Engineer or the Engineer's duly appointed representative so requires, either prior to beginning or during the progress of the work the Contractor shall submit samples of materials for such special tests as may be necessary to demonstrate that they conform to specifications. Such samples, including concrete test cylinders, shall be furnished, taken, stored, packed and shipped as directed at the expense of the Contractor. The Contractor shall, at his expense, furnish approved molds for making test cylinders. All samples shall be packed so as to reach their destination in good condition and shall be labeled to indicate the material represented, the name of the building or work and location for which the material is intended and the name of the Contractor submitting the sample. To ensure consideration of samples, the Contractor shall notify the Engineer the Engineer's duly appointed representative by

letter that the samples have been shipped and shall properly describe the samples. The Contractor shall submit data and samples or place his orders sufficiently early to permit consideration, inspection, testing and approval before the materials are needed for incorporation into the work. Delay resulting from his failure to do so shall not be used as the basis of a claim against the Town, the Engineer, or their duly appointed representative.

6.02.04 When required, the Contractor shall furnish to the Engineer Engineer's or their duly appointed representative, triplicate, sworn copies of manufacturer's shop or mill tests (or reports from independent testing laboratories) relative to materials and concrete data. After approval of the samples, data, etc., the materials used on the work shall correspond therewith.

6.03 SHOP AND WORKING DRAWINGS The Contractor shall submit for approval, shop and/or working drawings of concrete reinforcement, structural details, piping layout, materials fabricated especially for this project and material specifications for which drawings are specifically requested. The shop drawings for items of work that require design by a professional engineer or architect, as defined by the General Statutes of the State of Connecticut shall bear the seal and signature of said professional engineer or architect licensed and registered in the State of Connecticut and qualified to design such items.

6.03.01 Such drawings shall show the principal dimensions and construction details. When it is customary to do so, or when the dimensions are of particular importance, the drawings shall be certified by the manufacturer as correct for this project.

6.03.02 No material shall be purchased or fabricated until the Engineer or the Engineer's duly appointed representative has certified that the shop or working drawings conform to the contract requirements. All materials and work involved in the construction shall then be as represented by said drawings.

6.03.03 No work shall be done upon any part of a structure, the design or construction of which is dependent upon the features for which approval is required, until such approval has been given.

6.03.04 All shop or working drawings shall be submitted in triplicate to the Engineer or the Engineer's duly appointed representative through the Contractor. Only drawings which have been checked and corrected by the material fabricator should be submitted. The Contractor shall be responsible for the prompt submission of all shop or working drawings so that there shall be no delay to the work due to the absence of such drawings. Additional prints of approved drawings shall be furnished as required.

6.03.05 Two copies of approved shop drawings shall be returned to the Contractor.

6.03.06 The approval of shop and working drawings, etc. will be general and shall not relieve the Contractor from the responsibility for details of design, dimensions, etc., necessary for proper fitting and construction of the work required by the Contract.

6.04 OCCUPYING PRIVATE LAND The Contractor shall not (except after written consent from the proper parties) enter or occupy with men, tools, materials any land outside the rights-of-way or property of the Town.

6.05 INTERFERENCE WITH AND PROTECTION OF STREETS The Contractor shall not close or obstruct any portion of a street, road or private way without obtaining permits therefor from the Director of Community Services. If any street or private way shall be rendered unsafe by the Contractor's operations, he shall make such repairs or provide such temporary ways or guards as shall be acceptable to the Town or owners of the private way.

Streets, roads, private ways and walks not closed shall be maintained passable by the Contractor at his expense and the Contractor shall assume full responsibility for the adequacy and safety of provisions made.

The Contractor shall, 24 hours in advance, notify the Police and Fire Departments in writing with a copy to the Engineer, if the closing of a street is necessary. He shall cooperate with the Police Department in the establishment of alternate routes and, at his own expense, shall provide adequate detour signs, plainly marked and well lighted, in order to minimize confusion.

6.06 STORAGE OF MATERIALS AND EQUIPMENT All excavated materials, construction equipment and materials to be incorporated in the work shall be placed so as not to injure the work and so that free access can be had at all times to all parts of the work and to all public utility installations in the vicinity of the work. Excavated materials and any other materials shall be kept neatly piled and compactly stored in such location as will cause a minimum of inconvenience to public travel and adjoining tenants. There shall be no stockpiling of materials within the street lines during non working hours. There shall not be stockpiling or placement of excavated or other materials on private or personal property without prior written permission of the owner thereof.

6.07 INSUFFICIENCY OF SAFETY PRECAUTIONS If at any time, in the opinion of the Engineer, or his duly authorized representative, the work is not properly lighted, barricaded and in all respects safe in regard to public travel, persons on or about the work or public or private property, the Engineer or his duly authorized representative shall have the right to order such safeguards to be erected and such precautions to be taken as he deems advisable and the Contractor does not or cannot immediately put the work and the safeguards

into proper and approved condition or if the Contractor or his representative is not upon the ground so that he can be notified immediately of the insufficiency of safety precautions, the Engineer or his duly authorized representative may put the work into such a condition that it shall be, in his opinion, in all respects safe. The Contractor shall pay all expenses of such labor and materials as may have been used for this purpose by him or by the Engineer. Such action of the Engineer or his duly authorized representative, or his failure to take such action, shall in no way relieve the Contractor of the entire responsibility for any cost, loss or damage sustained on account of the insufficiency of the safety precautions taken by him or his duly authorized representative acting under authority of this section.

6.08 TRAFFIC CONTROL All conditions of current policies and procedures as promulgated by the Traffic Authority, through the Engineering Division, shall be a part of these bidding documents and the Contractor shall conform to these standards. Those policies and procedures are incorporated herein by reference as Exhibit C.

6.08.01 The Contractor shall be paid by the Town for the expense of Traffic Control Personnel. The Contractor shall specifically include traffic control personnel in the classification of workmen eligible for Workmen's Compensation.

6.09 SANITARY REGULATIONS The Contractor shall provide adequate sanitary conveniences for the use of those employed on the work. Such conveniences shall be made available when the first employees arrive on the work, shall be properly secluded from public observation and shall be constructed and maintained in suitable numbers and at such points and in such manner as may be required or approved.

6.09.01 The Engineer shall have the right to inspect any building or other facility erected, maintained or used by the Contractor to determine whether or not the sanitary regulations have been complied with.

6.10 LINES, GRADES AND MEASUREMENTS The controlling lines and grades shall be given to the Contractor who shall provide, at his own expense, such specialized equipment, forms, materials and labor as may be required. Additional specialized equipment, lines, grades and forms shall be furnished and set by the Contractor as directed. If the Contractor, through willfulness or carelessness, removes or permits to be removed any reference marks establishing said controlling lines and grades before the prosecution of the work requires such removal, the replacement of such reference marks shall be at the Contractor`s expense.

6.10.01 The Contractor shall make all measurements and check all dimensions necessary for the proper construction of the work called for by the drawings and specifications. During the prosecution of the work he shall make all necessary measurements to prevent misfitting in said work and he shall be responsible therefore and for the accurate construction of the entire work.

6.11 WORK TO CONFORM During its progress and on its completion, all work shall conform truly to the lines, levels and grades indicated on the drawings or given by the Engineer and shall be built in a thoroughly substantial and workmanlike manner in accordance with the Contract Bidding Documents, and the directions given from time to time by the Engineer. In no case shall any work in excess of the requirements of the drawings and specifications be paid for unless ordered in writing by the Engineer.

6.12 COMPUTATIONS OF QUANTITIES For estimating quantities in which the computation of area by geometric methods would be comparatively laborious, it is stipulated and agreed that the planimeter shall be considered an instrument of precision adapted to the measurement of such areas.

6.12.01 It is further stipulated and agreed that the computation of the volume of prismoids shall be by the method of average end areas.

6.13 PLANNING AND PROGRESS SCHEDULES Before starting the work, and from time to time during its progress, as the Engineer may request, the Contractor shall submit to the Engineer, a written description of the methods he plans to use in doing the work and the various steps he intends to take. The Contractor and Town will agree to such progress schedules in writing which shall be incorporated as a provision of the contract. Failure to adhere to such progress schedules shall be subject to sanctions in accordance with Section 2.01.08 of the Invitation To Bid and Section 5.13 of the General Conditions.

6.13.01 If requested by the Engineer, within 15 days after the date of starting work, the Contractor shall prepare and submit to the Engineer (a) a written schedule fixing the dates at which additional drawings, if any, will be required and (b) a written schedule fixing the respective dates for the start and completion of various parts of the work. Each such schedule shall be subject to review and change from time to time during the progress of the work.

6.14 PRECAUTIONS AGAINST ADVERSE WEATHER During adverse weather and against the possibility thereof, the Contractor shall take all necessary precautions so that the work may be properly and satisfactorily done in all respects. When required, protection shall be provided by the use of tarpaulins, wood and building-paper shelters or other approved means.

6.14.01 During cold weather, materials shall be preheated, if required, and the materials and adjacent structure into which they are to be incorporated shall be made and kept sufficiently warm so that a proper bond will take place and a proper curing, aging or drying will result. Protected spaces shall be artificially heated by approved means which will result in a moist or a dry atmosphere according to the particular requirements of the work being protected. Ingredients for concrete and mortar shall be sufficiently heated in

accordance with applicable ASTM, ASA and/or AC specifications so that the mixture will be warm throughout when used.

6.14.02 The Engineer may suspend construction operations at any time when, in his judgement, the conditions are unsuitable or the proper precautions are not being taken, whatever the weather may be in any season.

6.15 DEFINITIONS Whenever the words defined in this section or pronouns used in their stead occur in the specifications, they shall have the meanings herein given:

6.15.0l AS DIRECTED, AS REQUIRED, ETC. Wherever in the specifications or on the Drawings, the words, "if requested", "as directed", "as required", "as permitted", or words of like importance, it shall be understood that the direction, requirement or permission of the Engineer is intended. Similarly, the words "approved", "acceptable", "satisfactory" and words of like import shall mean approved by, acceptable to or satisfactory to the Engineer.

6.15.02 ELEVATION The figures given in the contract bidding documents after the word "elevation" or abbreviation of it shall mean the distance in feet above the datum adopted by the Engineer.

6.15.03 ROCK The word "rock" wherever used as the name of an excavated material or material to be excavated, shall mean boulders and pieces of concrete or masonry exceeding 1/2 cubic yards in volume; or solid ledge rock, which, in the opinion of the Engineer, requires for its removal any of the following: drilling and blasting, wedging, sledging, barring or breaking up with a power-operated tool. No soft or disintegrated rock which can be removed with a hand pick or power-operated excavator or shovel, no loose, shaken or previously blasted rock or broken stone in rock fillings or elsewhere; and no rock exterior to the maximum limits of measurements allowed, which may fall into the excavation, will be measured or allowed.

6.15.04 EARTH The word "earth" wherever used as the name of an excavated material or material to be excavated, shall mean all kinds of material except rock as above defined.

6.16 ABBREVIATIONS In referring to Standard Specifications, abbreviations are used as follows:

MDC ..... Metropolitan District Commission
ASTM ..... American Society of Testing Materials
ConnDOT ..... Connecticut Department of Transportation
AWWA..... American Water Works Association
ASA ..... American Standards Association Federal GSA
Specifications ..... Federal Specifications issued by the Federal Supply Service of the General Services Administration, Washington, D.C.
ACI ..... American Concrete Institute
AASHTO..... American Association of State Highway Officials

7.00 TECHNICAL SPECIFICATIONS

Copies of the "Town of West Hartford Infrastructure Rules and Specifications 1995" are available at a cost of $10 in the Division of Engineering and are hereby made part of these specifications. In addition Divisions II and II only of the "State of Connecticut Department of Transportation standard Specifications for Roads, Bridges and Incidental Construction Form 816" are hereby made a part of these specifications.

7.00 TECHNICAL SPECIFICATIONS

BASE BID ITEM NOS. 1-3 LOOP VEHICLE DETECTOR AND SAWCUT

The Form 816 is amended as follows:

11.11.03 – Construction Methods:

Replace the words "Plastic Compound" with "Flexible Traffic Detector Wire Loop Sealer."

Each loop shall have a separate 1" flexible lead in conduit through the granite curbing as per the "Handhole Lead In Diagram" detail.

2. Loop Detectors is amended as follows:

For reference, refer to the enclosed "Detector Lead In Cross Section" detail. The Contractor shall excavate next to the handhole to access the knockouts for the flexible conduit installation.

For the installation of the flexible conduit, the Contractor shall drill perpendicular to the curb from the street in the pre-excavated hole next to the handhole.

For cable splicing, refer to the "Loop Color and Splicing Diagram" detail. Loop detectors Blue 3, Red 3, and Black 3 shall enter flexible conduit 3. Loop detectors Blue 2, Red 2, Black 2 shall enter flexible conduit 2. Loop detectors Blue 1, Red 1, and Black 1 shall enter flexible conduit 1.

M.16.12 – LOOP VEHICLE DETECTOR AND SAWCUT

2. SAWCUT

Replace subarticle B. The Plastic Compound with the following:

B. Loop Detector Sealant:

The flexible traffic detector wire loop sealer (sealant) shall be a Bondo P-606 or approved equal, and shall conform to the following specifications, which describes the installation, minimum design, and functional performance requirements for flexible traffic loop wire encapsulant. The compound shall be used in sawcuts ¼" to 3/8" wide by 1 ½" to 2 ½" deep to protect loop detector wires from moisture, penetration, fracture, and shear while providing compressive yield strength to withstand normal vehicular traffic and movement in asphalt/concrete pavements.

1. The sealant shall be installed according to all manufacturers' recommendations.

2. The flow characteristics of the sealant shall guarantee encapsulation of loop wires.

3. The viscosity of the sealant shall be such that it does not run out of the sawcut in sloped roadways during and after installations.

4. The sealant shall allow vehicular traffic to pass over properly filled sawcuts immediately after installation without a stringing effect. The sealant shall form a surface skin within 60 minutes at 75 degrees Fahrenheit.

5. Cured sealant shall resist: effects of weather, vehicular abrasion, motor oil, gasoline, antifreeze, brake fluid, de-icing chemicals, salt, acid, hydrocarbons, and normal roadway encounters. Cured sealant shall not interfere with the performance of the loop detector.

6. Cured sealant shall maintain all its protective characteristics throughout the ambient temperature ranges experienced within the State of Connecticut.

7. The sealant shall show no visible signs of shrinkage during or after its installation.

8. The cleaning product to permit the clean-up of the uncured sealant shall not threaten harm to the workers or the environment. All manufacturers shall supply documentation including Material Safety Data Sheets (MSDS), which state that the application of the urethane can be applied without the use of a respirator in an open air environment.

9. Shelf Life: Sealant packaged in cartridges shall have a minimum of 9 months shelf life when stored under conditions specified on the label. Five gallon containers shall have a minimum shelf life of 12 months when stored under specified conditions.

10. The sealant shall be designed for roadway installation when the surface temperature is between 40 and 98 degrees Fahrenheit.

11. Uncured sealant shall have a viscosity of 5,000 CPS to 85,000 CPS.

12. Uncured sealant shall conform to the following testing requirements: ASTM D-1875, ASTM D-2834, ASTM D-1048B, and ASTM D-1640.

13. Cured sealant shall conform to the following testing requirements: ASTM D-2240, ASTM D-412A.

14. All suppliers shall provide a letter of certification from the manufacturer confirming the physical properties of condition nos. 13 and 14 above.

BID ALTERNATE ITEM NOS. 1-3 CONCRETE HANDHOLE

These items are included in the bid for complete replacement of existing handholes or new installations of Type I or West Hartford Type II handholes.

The Form 816 is amended as follows:

Section 10.10.02 Materials:

Refer to the "Typical Installation Details – Handholes" for the Type I and II handhole information.

The West Hartford Type II has the following geometric dimensions:

Overall Depth = 30"
Overall Knockout dimensions = 12" x 6" on all four sides

Type II handholes shall be manufactured by Cromwell Concrete Products, Inc., 867 Main Street, P.O. Box 99, Cromwell, Connecticut 06416, (860) 629-3417, or approved equal.

DETECTOR LEAD-IN CROSS SECTION

REV. 7/03

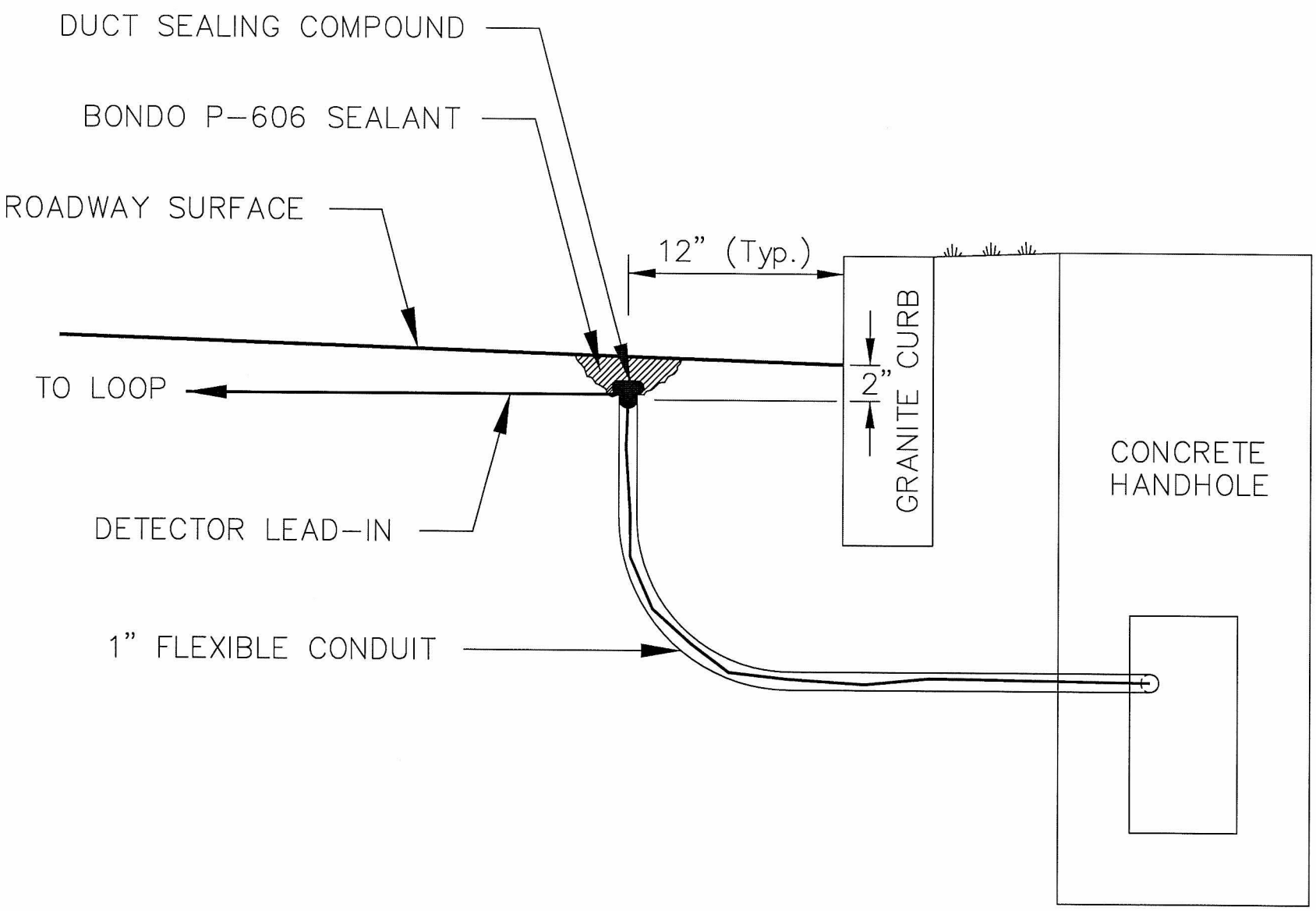

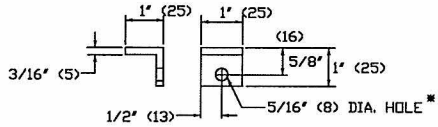

* NOTE:
ATTACH 6" (2 m) LENGTH OF NO. 8 GROUND WIRE TO GROUNDING TAB WITH ONE HOLE LUG, 1/4"-20 x 3/4" (M6 X 20 mm) LG. SST HEX HEAD BOLT, AND SST FLAT WASHER. ATTACH FREE END OF GROUND WIRE TO CONDUIT BONDING BUSHING IN HANDHOLE.

STEEL GROUNDING TAB

DIM. "B" CHART

ENGLISH HEIGHT	METRIC HEIGHT
2"	50
4" SHOWN	100
6"	150
12"	305

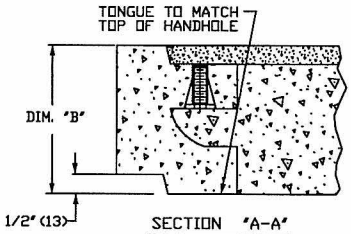

SECTION "A-A"

HANDHOLE EXTENSIONS

12 - #8 REINFORCING BARS REQ'D

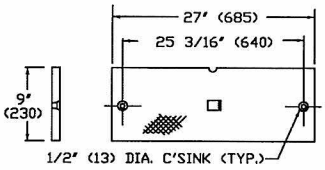

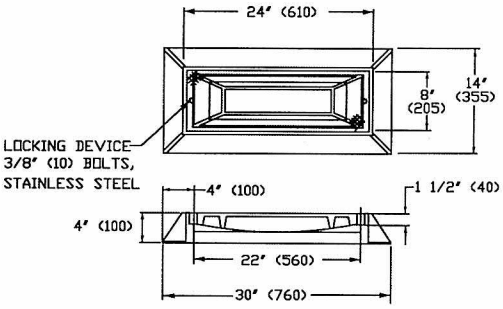

CAST IRON

HANDHOLE COVERS

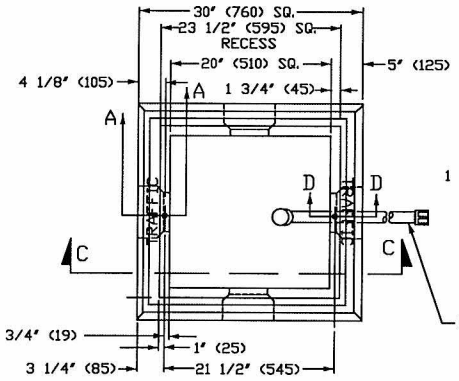

PLAN VIEW

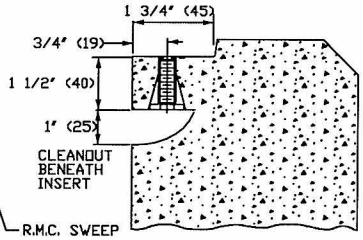

SECTION D-D

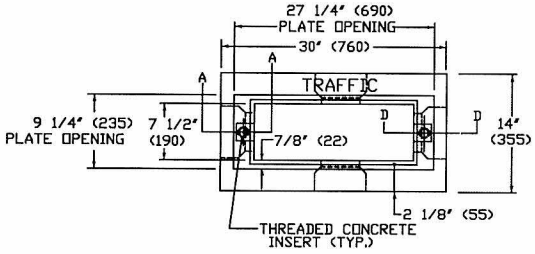

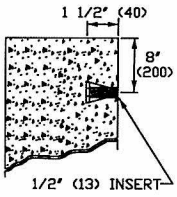

INSERT DETAIL

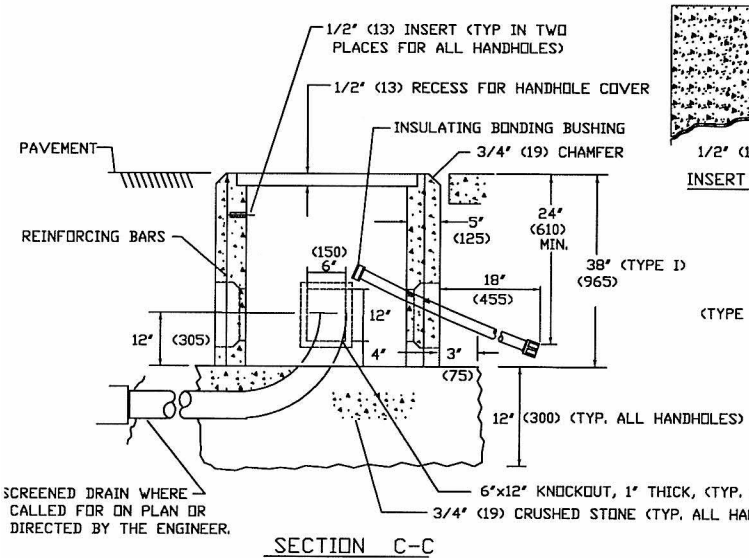

SECTION C-C

CONCRETE HANDHOLE

CLASS "A" CONCRETE

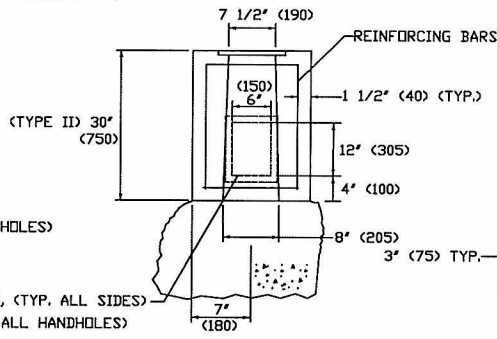

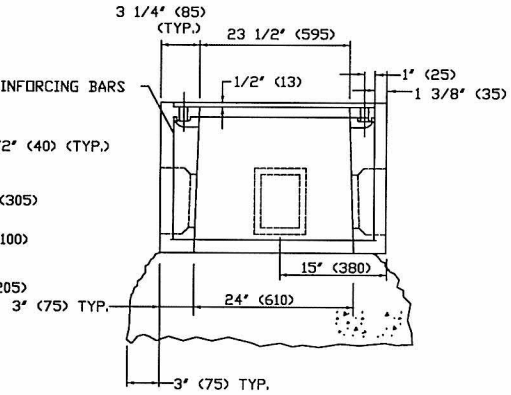

CONCRETE HANDHOLE TYPE II

CLASS "C" CONCRETE

NOTES:

1. TYPE II HANDHOLES SHALL BE PER TOWN OF WEST HARTFORD MODIFICATIONS, 6"x12" KNOCKOUTS, 1" THICK, TO BE PROVIDED ON ALL 4 SIDES (INTERIOR OF WALLS TO BE FLUSH).
2. GROUT AROUND ALL CONDUITS
3. USE 1 1/2" x 3/8" (40 x 10) CONCRETE INSERT, STANDARD THREAD, STAINLESS STEEL, FLAT HEAD BOLT, RECESSED IN PLATE COVER. INSERTS TO HAVE CLEANOUTS.
4. TYPE II HANDHOLE 30" (760) SIDE INSTALLED PARELLEL TO ROAD UNLESS OTHERWISE NOTED.
5. CAST THE WORD "TRAFFIC" INTO TOP EDGE OF HANDHOLE, 1 1/2" (40) LETTERS.
6. WHERE AN EXISTING CONCRETE SIDEWALK SLAB ABUTTING A HANDHOLE IS DAMAGED OR CUT DURING INSTALLATION THE ENTIRE SECTION SHALL BE REPLACED.
7. 12-#3 REINFORCING BARS REQUIRED FOR ALL HANDHOLES.

TYPICAL INSTALLATION DETAILS - HANDHOLES

HANDHOLE LEAD-IN DIAGRAM

REV. 7/03

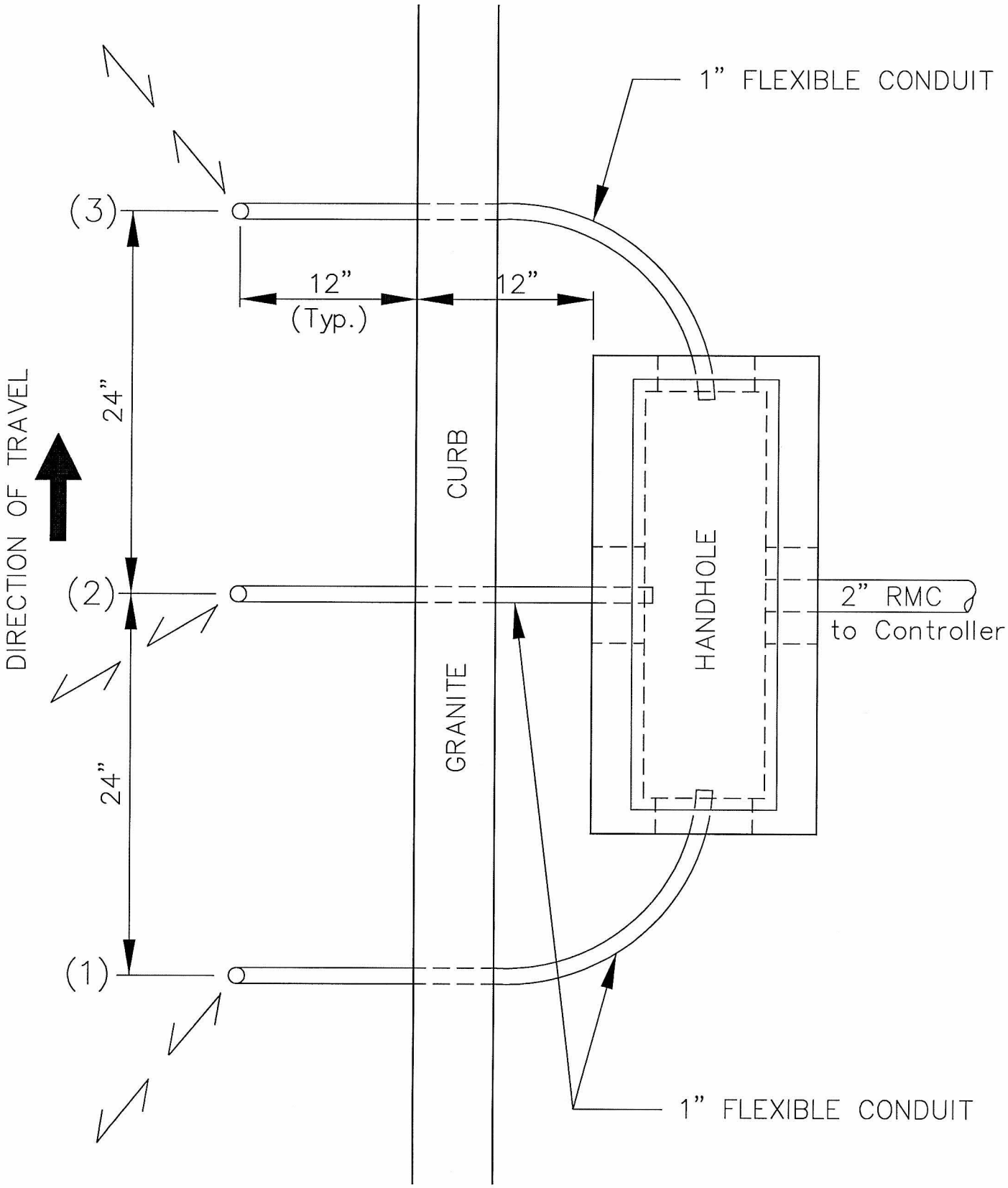

LOOP COLOR & SPLICING DIAGRAM

REV. 7/03

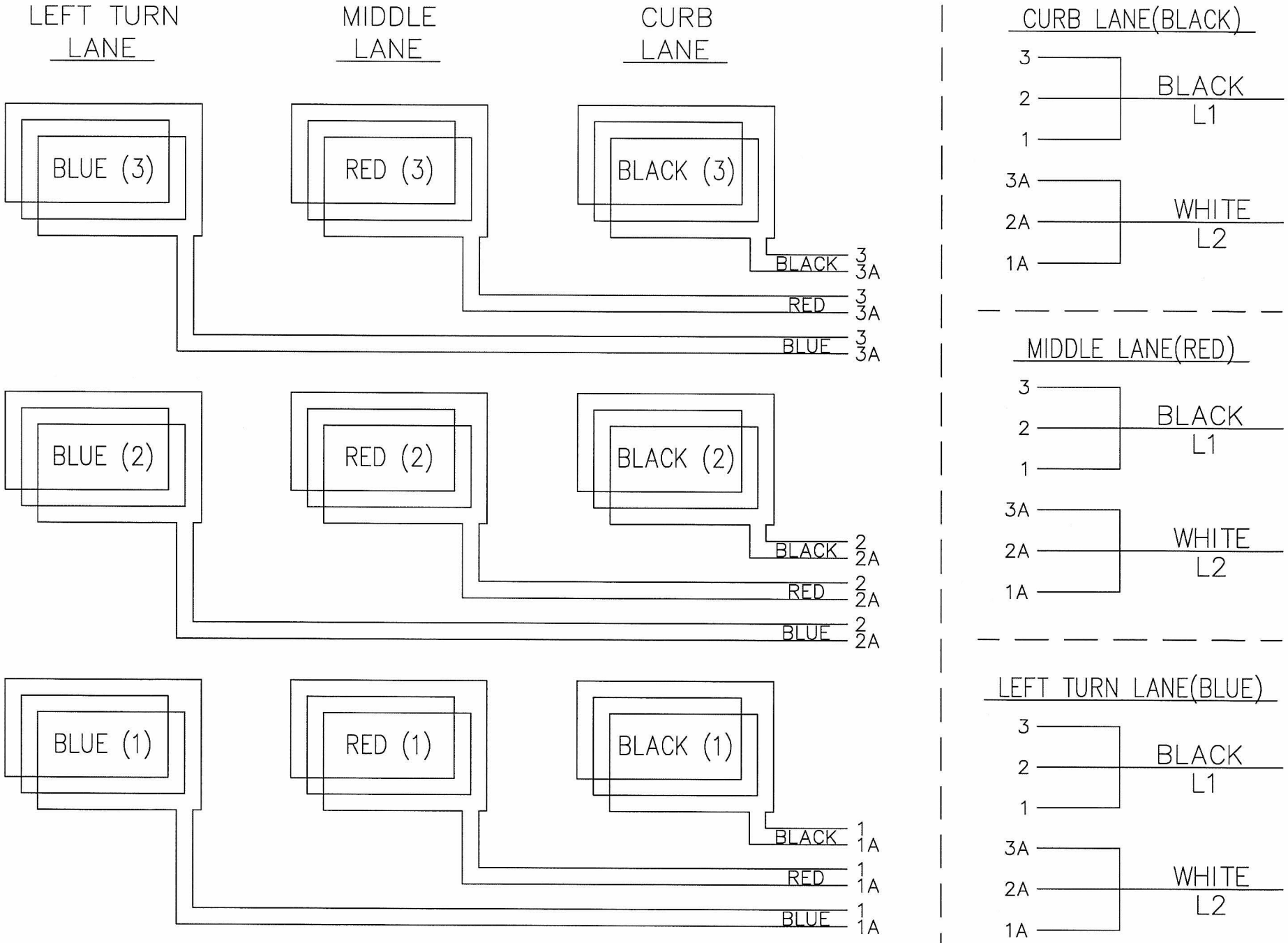

8.00 EXHIBITS

8.01 Exhibit A - Insurance
8.02 Exhibit B - Traffic Control

EXHIBIT A - INSURANCE

8.01.1 The Contractor shall procure insurance coverage against claims that may arise from, or in connection with the performance of the Contractor, his agents, representatives, employees, or subcontractors pursuant to this contract. The insurance coverage shall remain in full force for the duration of the contract term including any and all extensions. The Contractor shall pay the cost of such insurance.

8.01.2 For the purpose of Article 8.01: the term "Contractor" shall also include their respective agents, representatives, employees or subcontractors; and the term "Town of West Hartford and West Hartford Board of Education" (hereinafter called the "Owner") shall include their respective boards, commissions, officials, officers, agents, consultants, volunteers and employees.

8.01.3 The insurance required by Section 8.01 shall be written for not less than the scope and limits of insurance specified by Subparagraph 8.01.4, or required by applicable federal, state and/or municipal law, regulation or requirement, whichever coverage is greater. It is agreed that the scope and limits of insurance coverage specified by Subparagraph 8.01.4 are minimum requirements and shall in no way limit or exclude the Owner from additional limits and coverage provided under the Contractor's policies. Coverage, whether written on an occurrence or claims-made basis, shall be maintained without interruption from date of commencement of the Work until date of final payment and termination of any coverage required to be maintained after final payment.

8.01.4 Minimum Scope and Limits of Insurance:

.1 **Comprehensive General Liability:**
$1,000,000 combined single limit per occurrence for bodily injury, personal injury, property damage, contractual liability and products /completed operations. Contractor shall continue to provide products/completed operations coverage (including blasting operations, if applicable) for two (2) years after completion of the work.

.2 **Automobile Liability and Physical Damage Coverage:**
$1,000,000 combined single limit per occurrence for any auto, including statutory uninsured/underinsured motorists coverage and $1,000 medical payments. Policy shall be endorsed to include collision and comprehensive coverage for any auto used for the purpose of this contract.

.3 **Umbrella Liability:**
$1,000,000 per occurrence, $2,000,000 aggregate, following form.

.4 **Workers' Compensation:**
Coverage A / Workers' Compensation: statutory limits as required by the Labor Code of the State of Connecticut. Coverage B / Employer's Liability: limits of $100,000 each accident, $500,000 disease/policy limit, $100,000

disease/each employee. If the Contractor decides not to procure workers' compensation in accordance with Connecticut law, the Contractor agrees to comply with the Connecticut Workers' Compensation Act's (Act) requirements for withdrawing from the provisions of the Act, including, but not limited to, filing the appropriate notice of withdrawal with the commissioner. In lieu of procuring workers' compensation insurance and providing the Owner with proof thereof, the Contractor agrees to hold the Owner harmless from any and all suits, claims, and actions arising from personal injuries sustained by the Contractor or Contractor's employees during the course of the performance of this contract, however caused.

.5 **Personal Property:**
"All risk" property insurance on a replacement cost basis to cover the value of portions of the Work stored on and off the site, or in transit. The insurance shall cover personal property belonging to the Contractor and others (including but not limited to the personal property of subcontractors) located on Owner's property or work-site, while in use or in storage for the duration of the contract. In lieu of providing this coverage the Contractor agrees to hold the Owner harmless for any loss or damage to personal property however caused.

8.01.5 Additional Insured Endorsement:

All liability policies (with the exception of Worker's Compensation) shall include the Town of West Hartford, the West Hartford Board of Education, and their respective officers, agents, officials, employees, volunteers, boards and commissions as an Additional Insured with respect to liability arising out of or in connection with the activities performed by or on behalf of the Contractor; products and completed operations of the Contractor; premises owned, leased, or used by the Contractor; or automobiles owned, leased, hired or borrowed by the Contractor. The coverage shall contain no special limitations on the scope of protection afforded to the Owner.

8.01.6 Acceptability of Insurers:

Contractor's policies shall be written by insurance companies licensed to do business in the State of Connecticut, with a Best's rating of no less than A:VII, or otherwise deemed acceptable by the Town's Risk Manager.

8.01.7 Subcontractors:

Contractor's policies shall include all subcontractors as insureds under its policies or shall furnish separate certificates and endorsements for each subcontractor. All coverage for subcontractors shall be subject to all of the requirements stated herein.

8.01.8 Waiver of Subrogation:

Contractor shall provide that all insurance policies include a waiver of subrogation clause that states that it is agreed that in no event shall the insurance company have any right of recovery against the Owner. When the Contractor is self-insured, it is agreed that in no event shall the Contractor have any right of recovery against the Owner.

8.01.9 Claims-Made Form:

If the insurance coverage is underwritten on a claims-made basis, the retroactive date shall be prior to or coincident with the date of the contract. The certificate of insurance shall state the retroactive date and that the coverage is claims-made. The Contractor shall maintain coverage for the duration of the contract and for the two (2) years following the completion of the contract. Evidence of such coverage shall be provided to the Owner thirty (30) days prior to each policy expiration.

8.01.10 Aggregate Limits::

If a general aggregate is used, the general aggregate limit shall apply separately to the project or shall be twice the occurrence limit. All aggregate limits must be declared to the Owner. If the aggregate limit is eroded, the Contractor agrees to reinstate or purchase additional limits to meet the minimum limit requirements stated herein. The Contractor shall pay the premium.

8.01.11 Deductibles and Self-Insured Retentions:

Contractor must declare any deductibles or self-insured retentions to the Owner. All deductibles or self-insured retentions are the sole responsibility of the Contractor to pay and/or to indemnify.

8.01.12 Notice of Cancellation or Nonrenewal:

For other than non-payment of premium, each insurance policy required by this exhibit shall be endorsed to state that coverage shall not be suspended, voided, cancelled, or reduced in coverage or in limits except after thirty (30) days prior written notice has been given to the Owner. Ten (10) days prior written notice shall be given for non-payment of premium

8.01.13 Liability (General, Automobile, Umbrella/Excess coverage are to contain the following provisions:

.1 The Contractor's insurance coverage shall be primary insurance with respect to the Owner. Any insurance or self-insurance maintained by the Owner shall be excess of the Contractor's insurance and shall not contribute with it.

.2 Coverage shall state that the Contractor's insurance shall apply separately to each insured against whom a claim is made or suit is brought.

.3 Any failure to comply with the claim reporting provisions of the policy shall not affect coverage provided to the Owner.

8.01.14 Verification of Coverage::

The Contractor shall provide the Owner with certificates of insurance, declaration pages, policy endorsements or provisions confirming compliance with this exhibit before work commences. The certificates and endorsements for each insurance policy are to be signed by a person authorized by the insurer to bind coverage on its behalf. Renewal of expiring certificates shall be filed thirty (30) days prior to expiration. The Owner reserves the right to require complete, certified copies of all required policies, at any time.

All insurance documents required by this exhibit should be mailed to: Town of West Hartford, Risk Management Division, 50 South Main Street, West Hartford, Connecticut 06107.

8.01.15 Failure to Purchase or Maintain Insurance:

If the Owner or the Contractor is damaged by failure of the Contractor to purchase or maintain insurance required by this exhibit, the Contractor shall bear all reasonable costs including, but not limited to, attorney's fees and costs of litigation, properly attributable thereto.

8.01.16 Subrogation::

The Owner does not agree to waive any rights of subrogation, nor any rights of action against the Contractor, in connection with or arising out of any claims or damages which may arise from the operations under the contract.

A POLICY REGARDING THE MAINTENANCE AND PROTECTION OF TRAFFIC AND PEDESTRIANS DURING CONSTRUCTION WITHIN STREET RIGHTS OF WAY (REVISED MARCH 2010)

I. GENERAL

A. The Town of West Hartford shall control all traffic at construction and non-construction work sites within street rights of way located in Town, **including State roads other than Interstate 84 and its ramps.** This shall include work by permit (State or local) and non-construction work (i.e. manhole, overhead line and cable work).

B. Permits shall be issued by the Division of Engineering, Department of Community Services, or District One of the State of Connecticut Department of Transportation. All permits are subject to review by the Police Department.

C. All work in the roadway or affecting pedestrian travel shall require placement and/or modification of appropriate traffic control devices as per the most current edition of the Federal Highway Administration's Manual on Uniform Traffic Control Devices or the Connecticut Department of Transportation's Standard Traffic Control Plans. **The use of Police Officers or other personnel does not eliminate this requirement.**

D. Detours, stoppages of traffic, and/or alternating traffic patterns require the approval of the Director of Community Services (through the Division of Engineering), at least one week in advance, except in the event of emergency. This is necessary to allow time for review and possible public notification.

E. Existing signs and pavement markings shall not be removed without prior approval of the Engineering Division.

II. TRAFFIC CONTROL PERSONNEL

A. West Hartford Police shall control all traffic for construction and non-construction projects on the following arterial and collector streets:

Town Streets

Asylum Avenue
Boulevard
Brace Road (Arundel Ave - North Main St.)
Caya Avenue (I-84 ramp to Prospect Ave.)
Dale Street
Farmington Avenue
Flagg Road
Fern Street
Flatbush Avenue
Isham Road
Kane Street
LaSalle Road
Mayflower Street
Memorial Road
Mountain Road
New Park Avenue
North Main Street
North Quaker Lane
Oakwood Avenue
Park Road
Prospect Avenue (New Park Avenue through Park Road)
Quaker Lane South
Raymond Road
Ridgewood Road
Sedgwick Road
Shield Street
South Road
South Street
South Main Street
Trout Brook Drive
Tunxis Road

State Highways

Albany Avenue (Rt. 44)
Bloomfield Avenue (Rt. 189)
Farmington Avenue (Rt. 4 - West of Old Mill Lane)
New Britain Avenue (Rt. 71, 173, 529)
Newington Road (Rt. 173)
North Main Street (Rt. 218) (North of Albany Avenue)
Ridgewood Road Rt. 535 (South of I-84 Westbound ramp)
Simsbury Road (Rt. 185)
South Main Street Rt. 173 (New Britain Avenue to Beechwood Road)

B. Exceptions to Above

1. All non-construction projects (i.e. manhole and overhead linework, but not limited to) four (4) hours or less that does not jeopardize public safety.

2. The Town shall have the authority to require Police on streets not listed above, in the vicinity of schools, or where parking or geometric conditions (e.g. narrowed lanes or visibility restrictions) may otherwise jeopardize safety. Examples of such streets include, but are not limited to: Buena Vista Rd., Highland St., Hunter Dr., King Philip Dr., Loomis Dr., Still Rd., Webster Hill Blvd., Whiting Ln., and other local neighborhood streets adjacent to schools.

3. The contractor may petition for due cause, the elimination of Police requirement, and approval shall rest with the Engineering Division, in consultation with the Police Department.

C. Procedural and other issues

1. Where Police officers are required by Section IIA or IIB.2, officers shall be requested no later than 48 hours before mobilization. Late requests may result in delayed permission to start work, rather than elimination of the Police requirement. When there are not enough officers available to cover all requests, priority locations will be determined by the Engineering Division, in conjunction with the Police Department.

2. When Police Officers are not available for streets listed in Section IIA or IIB.2, the contractor shall designate certified personnel, not engaged in construction activity, charged with the responsibility to maintain traffic and pedestrian safety, including traffic control devices (per Section I.C. of this policy) and passage of traffic.

The following is a list of streets with restricted work hours, assuming maintenance of two-way traffic. The Town reserves the right to modify these hours or require special provisions as necessary, particularly near schools and other significant traffic generators. Streets not listed are subject to Noise Ordinance hours, which are 7:00AM until one hour after sunset. Contractor may petition for extended hours, subject to conditions, and where applicable, availability of Police Officer(s).

Albany Ave.	8:30AM - 4:00PM	Oakwood Ave.	8:30AM - 4:00PM
Asylum Ave. (east of North Main St.)	8:30AM - 4:00PM	Park Rd. (Raymond - T B Dr.	8:30AM-4:00PM 9:00AM-3:30PM)
Bloomfield Ave.	8:30AM - 4:00PM	Prospect Ave.	8:30AM - 4:00PM
Boulevard	8:30AM - 4:00PM	Quaker Lane So.	8:30AM - 4:00PM
Caya Ave.(east end)	8:30AM - 4:00PM	Raymond Road	8:30AM - 4:00PM
Farmington Ave.	8:30AM - 4:00PM (7:00AM in Center)	Ridgewood Rd.	8:30AM - 4:00PM
Fern St.	8:30AM - 4:00PM	Sedgwick Rd.	8:30AM - 4:00PM
Flatbush Ave.	8:30AM - 3:30PM	Simsbury Rd.	8:30AM - 4:00PM
Kane St.	8:30AM - 4:00PM	South St.	8:30AM - 4:00PM
King Philip Dr.	8:30AM - 4:00PM	South Main St.	9:00AM - 3:30PM (7:00AM in Center)
Mountain Rd.	8:30AM - 3:30PM	Steele Rd.	8:30AM - 4:00PM
New Britain Ave.	8:30AM - 3:30PM	Trout Brook Dr.	9:00AM - 3:30PM
Newington Rd.	8:30AM - 4:00PM	Tumblebrook Ln. (west of King Philip Dr.)	8:30AM - 4:00PM
New Park Ave.	8:30AM - 3:30PM		
North Main St.	9:00AM - 3:30PM		

SW:sr