Late Item #6 IWWA
Dec 4, 2017

Catherine Dorau

From:	DAVID F. WHITNEY <dfwengineers@sbcglobal.net>
Sent:	Friday, December 01, 2017 12:08 PM
To:	Catherine Dorau; Todd Dumais; Chuck Guarino; Brittany Bermingham
Cc:	Jack Kemper; Bruce Daigle; Robert Norman; Laura Craco; Juli Obernesser
Subject:	"Techno Metal Post" Dock for 38 Wood Pond Road
Attachments:	14027-001a City of west Hartford - U Shape plate for P2.pdf; 16027-003a Town of Randolph, Powers Farm Boardwalk Project[1].pdf; Chart of post selection.pdf; Correlation Table 812-160 Connecticut.pdf; Maximum Bearing.pdf; P3-R1-A.pdf; P4-R1-A.pdf; Predicting Helical Pile Capacity[1].pdf; relation.pdf; Craco-Norman Dock Detail - 30 Nov 2017.pdf; Craco-Norman Dock Plan - 30 Nov 2017.pdf

Cathy and all: Hello,

As requested, attached are all of the items send to me regarding the proposed "Techno metal post" dock for 38 Wood Pond Road.

As told to me, this is the same type of dock that the Woodridge Lake Association installed at their community beach.

We will be prepared to discuss the dock installation in detail at the IW Commission meeting this coming Monday night 12/4.

Thanks!

--Dave W.

David F. Whitney, PE
CT Reg. No. 14949
David F. Whitney Consulting Engineers, LLC
21 Arch Road - Suite D
P.O. Box 1605
Avon, CT 06001
office: 860-673-8412
fax: 860-673-8413

cell: 860-508-8152

email: dfwengineers@sbcglobal.net

RECEIVED
DEC - 1 2017
PLANNING & ZONING DIVISION
Town of West Hartford, CT

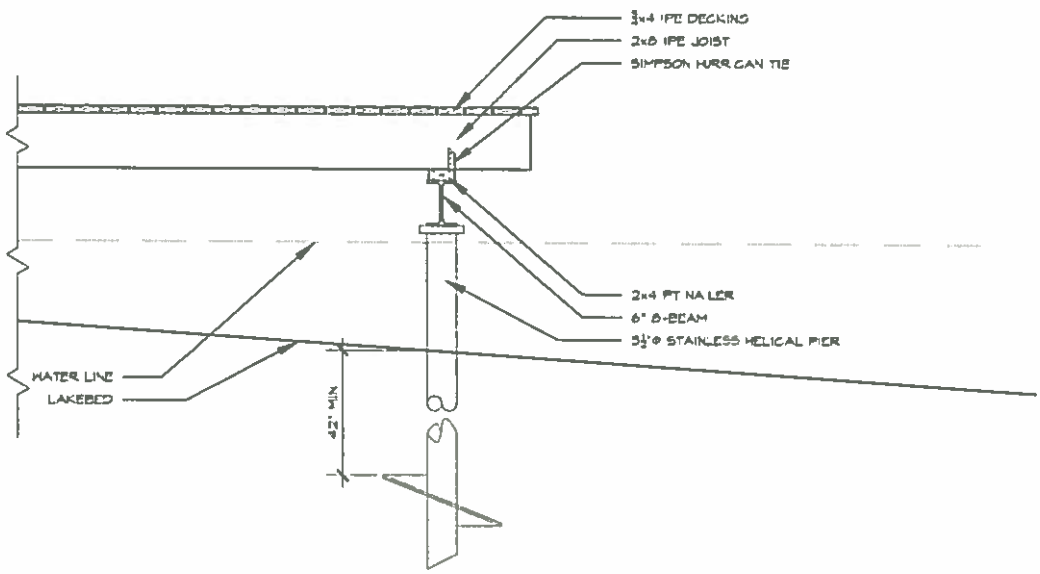

DOCK DETAIL @ HELICAL PIER
SCALE: 1"=1'-0"

38 Wood Pond Road

RECEIVED
DEC - 1 2017
PLANNING & ZONING DIVISION
Town of West Hartford, CT

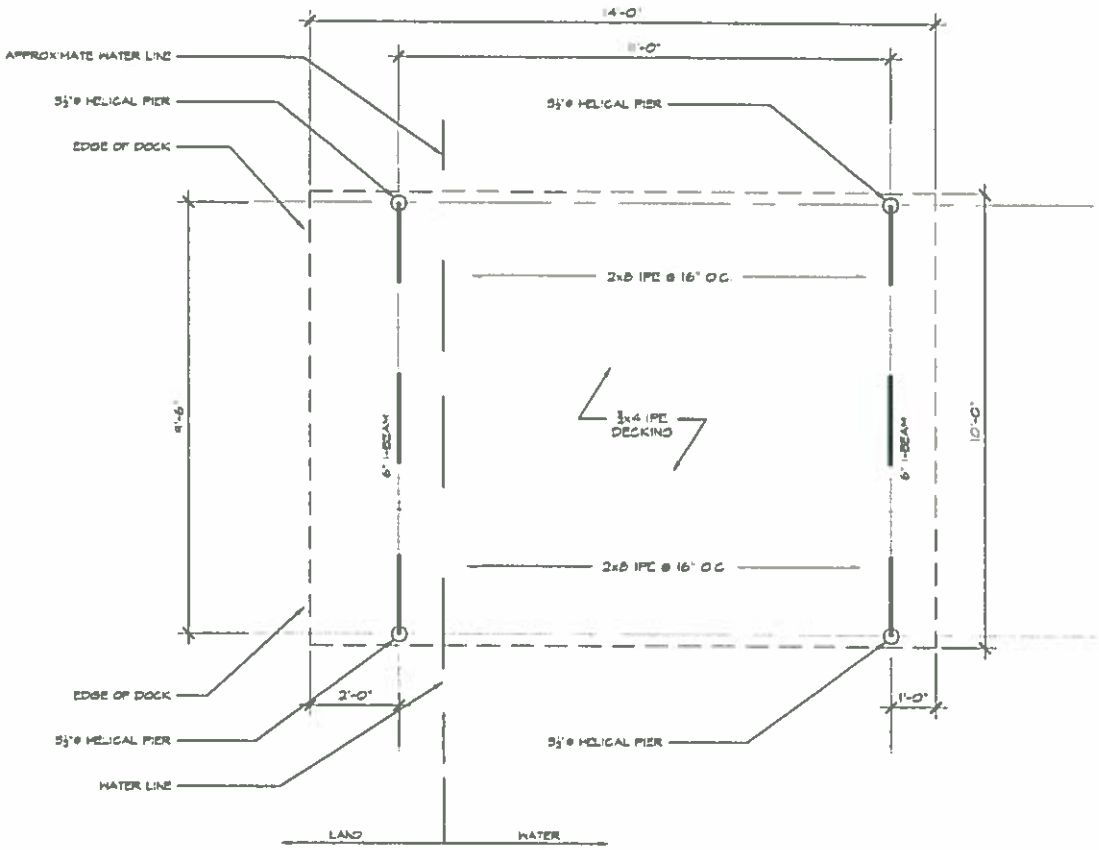

DOCK PLAN
SCALE: 1/2"=1'-0"

38 Wood Pond Road

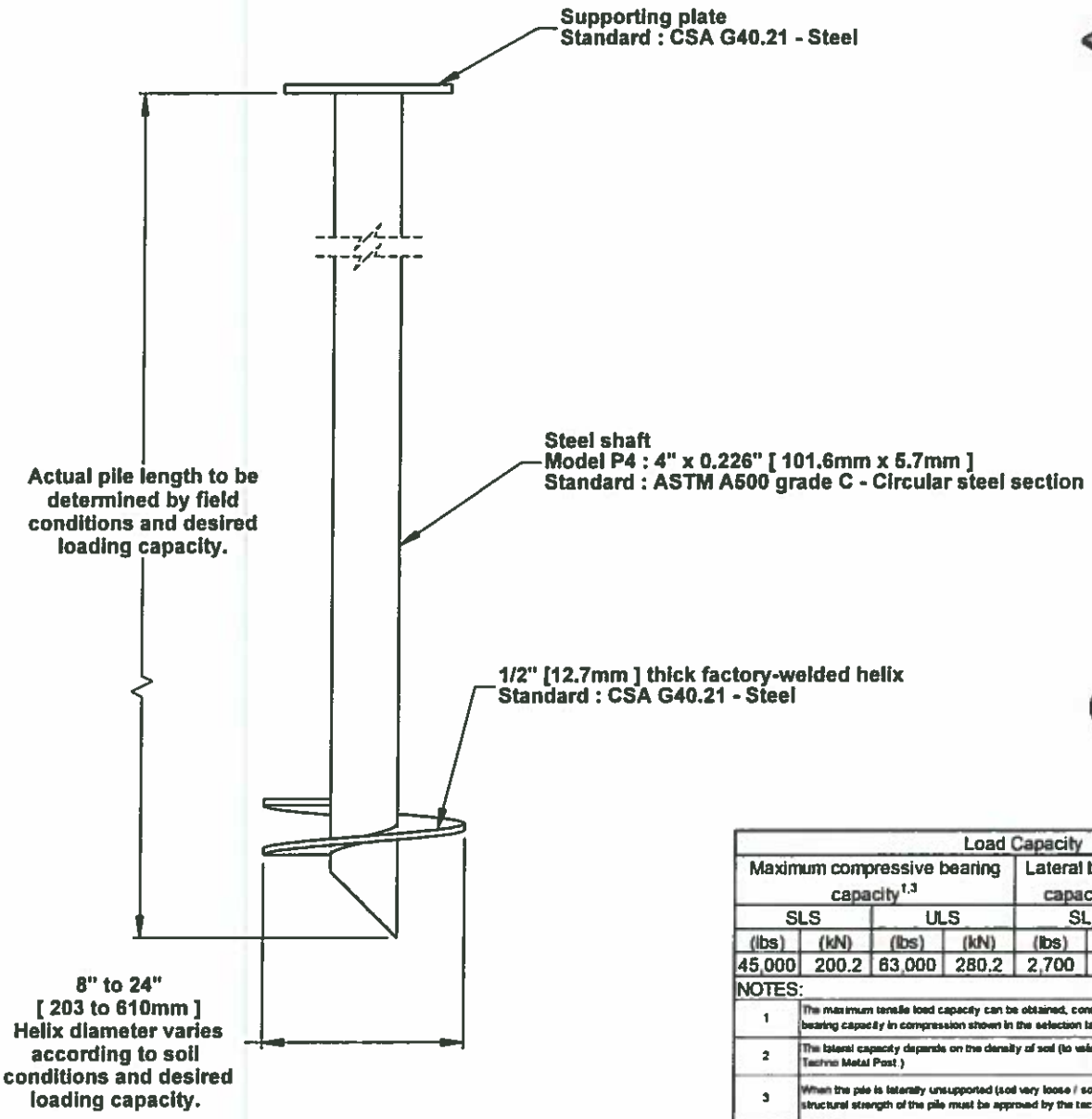

Load Capacity							
Maximum compressive bearing capacity[1,3]				Lateral bearing capacity[2,4]		Factored bending resistance	
SLS		ULS		SLS		ULS	
(lbs)	(kN)	(lbs)	(kN)	(lbs)	(kN)	(lbs.ft)	(kN.m)
45,000	200.2	63,000	280.2	2,700	12.0	9,411	12.8

NOTES:

1	The maximum tensile load capacity can be obtained, conservatively, by halving the values of the bearing capacity in compression shown in the selection table.
2	The lateral capacity depends on the density of soil (to validate consult technical department of Techno Metal Post)
3	When the pile is laterally unsupported (soil very loose / soft, liquefiable soils, water and air), the structural strength of the pile must be approved by the technical department of Techno Metal Post.
4	The values of lateral capacity are average values and can be modified, more or less, depending on the characteristics of the existing soil
5	If required, piles may be field welded with extensions to achieve greater loading capacities in poor soil conditions.
6	If required, the helical pile and the supporting plate can be galvanized in compliance with standard CAN / CSA G-164-M92 610g / m^2

techno Metal Post

1700, Setlakwe Street
Thetford Mines (QC) G6G 8B2
CANADA
www.technometalpost.com

CONFIDENTIAL

THE INFORMATIONS CONTAINED IN THIS DRAWING IS THE SOLE PROPERTY OF TECHNO PIEUX INC. ANY REPRODUCTION IN PART OR AS A WHOLE WITHOUT THE WRITTEN PERMISSION OF TECHNO METAL POST INC. IS PROHIBITED

REVISIONS

DATE	DESCRIPTION	REV.
28/06/2013	Revised load capacity.	1

Client :

Client adress :

RECEIVED
DEC - 1 2017
PLANNING & ZONING DIVISION
Town of West Hartford, CT

Project :

Drawing :

Techno Metal Post
Model P4
(Deep foundation)

Approved by :

Date :	Scale :
2011-10-31	N/A
Drawing no: P4-R1-A	Page number : SHEET 1 OF 1

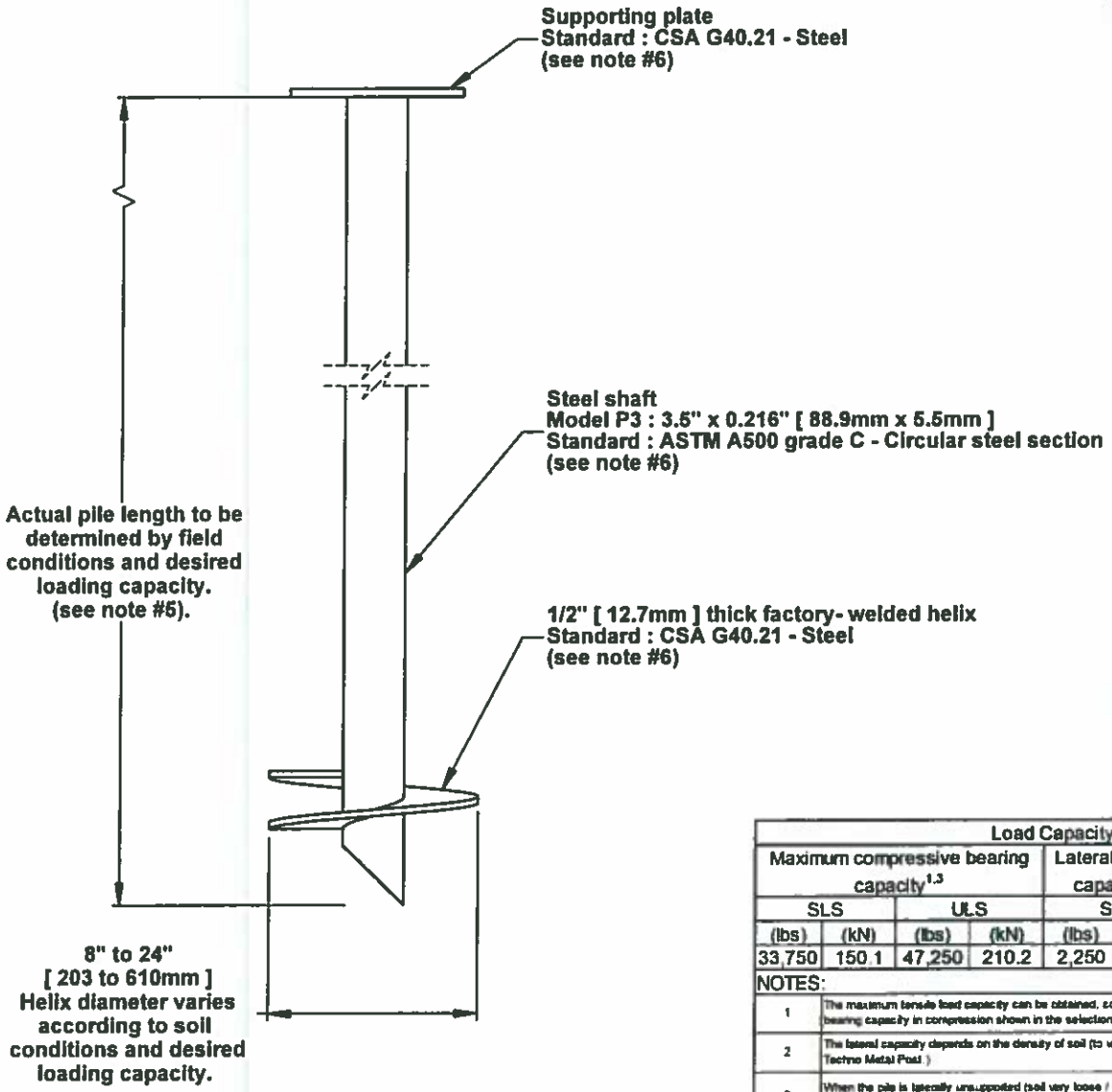

Load Capacity							
Maximum compressive bearing capacity[1,3]				Lateral bearing capacity[2,4]		Factored bending resistance	
SLS		ULS		SLS		ULS	
(lbs)	(kN)	(lbs)	(kN)	(lbs)	(kN)	(lbs.ft)	(kN.m)
33,750	150.1	47,250	210.2	2,250	10.0	6,454	8.8

NOTES:

1	The maximum tensile load capacity can be obtained, conservatively, by halving the values of the bearing capacity in compression shown in the selection table
2	The lateral capacity depends on the density of soil (to validate consult technical department of Techno Metal Post)
3	When the pile is laterally unsupported (soil very loose / soft, liquefiable soils, water and air), the structural strength of the pile must be approved by the technical department of Techno Metal Post.
4	The values of lateral capacity are average values and can be modified, more or less, depending on the characteristics of the existing soil.
5	If required, piles may be field welded with extensions to achieve greater loading capacities in poor soil conditions.
6	If required, the helical pile and the supporting plate can be galvanized in compliance with standard CAN / CSA G-164-M92 610g / m²

techno Metal Post™
1700, Setlakwe Street
Thetford Mines (QC) G6G 8B2
CANADA
www.technometalpost.com

CONFIDENTIAL
THE INFORMATIONS CONTAINED IN THIS DRAWING IS THE SOLE PROPERTY OF TECHNO PIEUX INC. ANY REPRODUCTION IN PART OR AS A WHOLE WITHOUT THE WRITTEN PERMISSION OF TECHNO METAL POST INC. IS PROHIBITED

REVISIONS

DATE	DESCRIPTION	REV.
28/06/2013	Revised load capacity.	1

Client :

Client adress :

RECEIVED
DEC - 1 2017
PLANNING & ZONING DIVISION

Project : Town of West Hartford, CT

Drawing :

Techno Metal Post
Model P3
(Deep foundation)

Approved by :

Date : 2011-10-31	Scale : N/A
Drawing no : P3-R1-A	Page number : SHEET 1 OF 1