LOCATION MAP: SCALE 1 IN. = 150 FT.

SURVEY NOTES:

1. THIS SURVEY HAS BEEN PREPARED PURSUANT TO THE REGULATIONS OF CONNECTICUT STATE AGENCIES SECTIONS 20-300b-1 THROUGH 20-300b-20 AND THE "STANDARDS FOR SURVEYS AND MAPS IN THE STATE OF CONNECTICUT" AS PREPARED AND ADOPTED BY THE CONNECTICUT ASSOCIATION OF LAND SURVEYORS, INC ON SEPTEMBER 26, 1996.

   THE SURVEY WAS PERFORMED TO THE STANDARDS OF ACCURACY FOR A HORIZONTAL CLASS C-2 IMPROVEMENT LOCATION SURVEY WITH A TOPOGRAPHIC INFORMATION ACCURACY OF CLASS T 2

2. THE NORTH ORIENTATION DEPICTED HEREON IS REFERENCED MAGNETIC NORTH AS OBSERVED IN THE FIELD ON 18 JUNE 2018

3. NO BOUNDARY LINE DETERMINATION DEPICTED HEREON PROPERTY LINES ARE FOR ORIENTATION PURPOSES ONLY

4. THE TOPOGRAPHIC INFORMATION DEPICTED HEREON IS DERIVED FROM ACTUAL ON THE GROUND LOCATION OF THE EXISTING CONDITIONS AS OBSERVED ON 18 JUNE 2017. VERTICAL INFORMATION DEPICTED HEREON IS REFERENCED TO A BENCHMARK RECOVERED AS OBSERVED IN THE FIELD ON 18 JUNE 2018

5. THE LOCATIONS OF EXISTING UTILITIES SHOWN ON THIS PLAN ARE BASED ON LIMITED FIELD OBSERVATIONS AND ARE AN APPROXIMATE REPRESENTATION ONLY. EXISTING UTILITIES ARE NOT GUARANTEED TO BE EXACTLY LOCATED, NOR GUARANTEED THAT ALL UNDERGROUND, OVERHEAD UTILITIES OR OTHER STRUCTURES ARE DEPICTED HEREON

6. INLAND WETLAND DELINEATION DEPICTED HEREON WAS PROVIDED BY IAN T COLE, PWS, AS LOCATED IN THE FIELD ON 18 JUNE 2018. THE SOIL TYPE WITHIN THE WETLAND DELINEATION IS IDENTIFIED AS ADVENTS (AD), AND THE REMAINING LAND DEPICTED HEREON IS IDENTIFIED AS UDORTHENTS (BOE). THE ENTIRE SITE AS DEPICTED FALLS WITHIN THE PUNCIPAL (SOFT UPLAND REVIEW AREA

GENERAL NOTES

1. REFER TO SHEET D-01 FOR DETAILS

MAP REFERENCES:

A. "PLAYGROUND LAYOUT PLAN PREPARED FOR JONATHAN'S DREAM PLAYGROUND - HEBREW HOME & HOSPITAL", SCALE: 1 INCH = 20 FEET, DATED: 6 JUNE 1982, AS PREPARED BY: F.A. HESKETH & ASSOCIATES, INC - BLOOMFIELD, CONNECTICUT

B. "LIMITED TOPOGRAPHIC SURVEY PREPARED FOR JONATHANS DREAM - 355 BLOOMFIELD AVE, WEST HARTFORD, CONNECTICUT", SCALE: 1 INCH = 20 FEET, DATED: 6 JANUARY 2014, AS PREPARED BY: F.A. HESKETH & ASSOCIATES, INC - BLOOMFIELD, CONNECTICUT

C. "EASEMENT - TOPOGRAPHIC MAP PREPARED FOR HARTFORD JEWISH COMMUNITY CENTER, INC ON LAND OF HEBREW HOME & HOSPITA - 335 BLOOMFIELD AVENUE, WEST HARTFORD, CONNECTICUT", SCALE: 1 INCH = 40 FEET, DATED: 18 DECEMBER 1994, REVISED: 1 APRIL 1996, AS PREPARED BY: F.A. HESKETH & ASSOCIATES, INC - BLOOMFIELD, CONNECTICUT

ABBREVIATIONS

N/F	NOW OR FORMERLY
VOL	VOLUME
PG	PAGE
AC	ACRES
SQ.FT	SQUARE FEET
±	MORE OR LESS
TYP	TYPICAL
IP	IRON PIPE
IR	IRON PIN
NR	NOT RECOVERED
REC	RECOVERED
BIT	BITUMINOUS
C/CONC	CONCRETE
PVMT	PAVEMENT
T/F	TOP OF FRAME
INV	INVERT
RCP	REINFORCED CONCRETE PIPE
UTY	UTILITY

LEGEND

- PROPERTY CORNER
- ANGLE POINT
- EXPOSED ROCK
- SIGN
- UTILITY POLE WITH LIGHT
- CATCHBASIN
- DRAINAGE MANHOLE
- ELECTRIC STRUCTURE
- LIGHT POLE
- RETAINING WALL
- METAL FENCE
- OVERHEAD WIRES
- INDEX CONTOUR
- INTERIOR CONTOUR

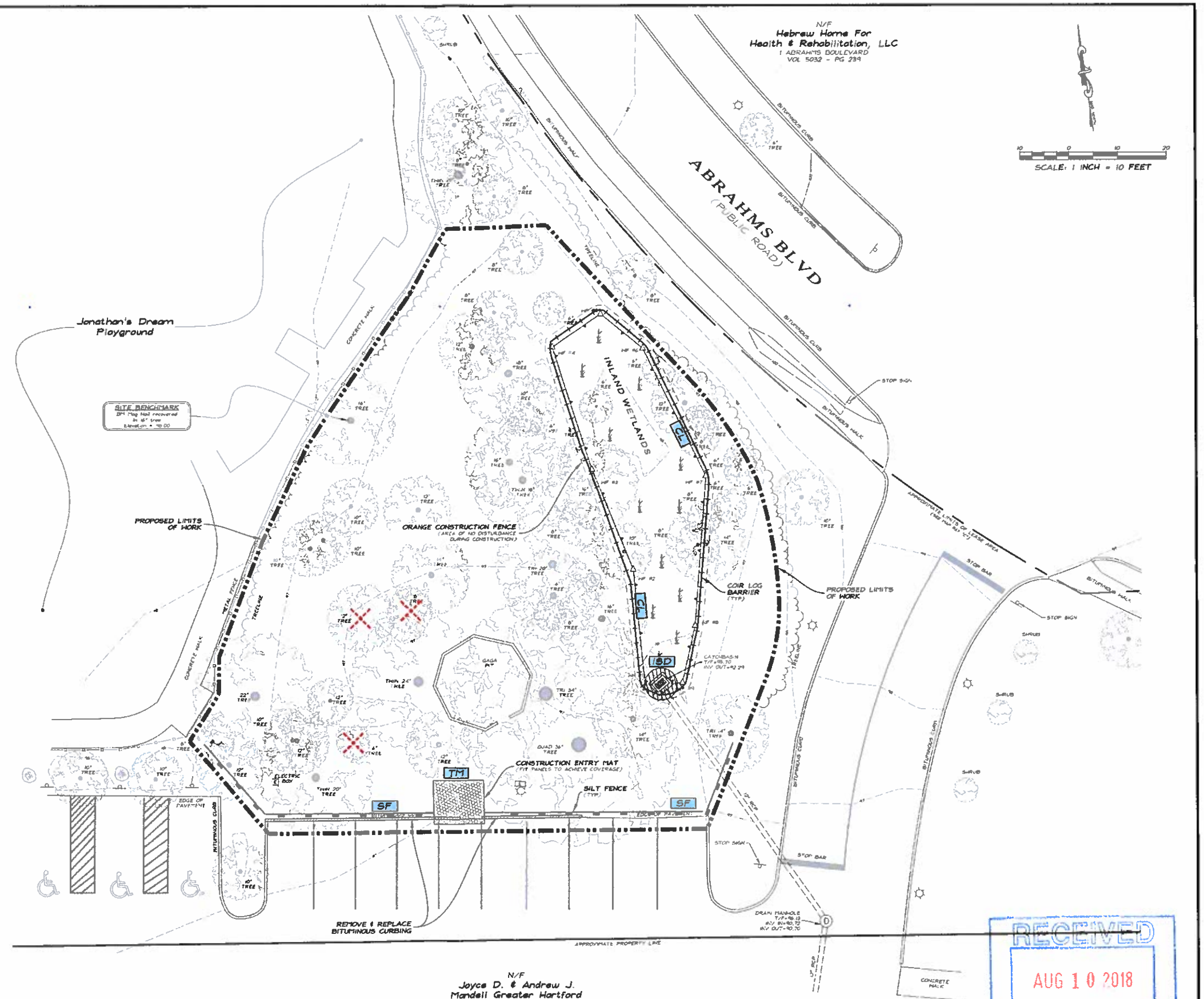

E&S CONTROL LEGEND:

- CL — COIR LOG BARRIER
- ISD — SEDIMENTATION CONTROL SYSTEM AT CATCH BASIN
- TM — CONSTRUCTION ENTRY MAT
- SF — SILT FENCE

SITE DEMOLITION LEGEND:

- BITUMINOUS CURB REMOVAL
- TREE REMOVAL

PROJECT DATA	
FIELD BOOK	BOOK No. 38 Pg. 58-89
DWG FILE	18-113 ORS - Rev 01.dwg
LAYOUT TAB	Improvement Location Survey
SHEET No.	1 OF 3

Limits of inland wetlands as flagged by Ian T. Cole, P.W.S., Soil Scientist

Signature — 9 August 2018 Date

To my knowledge and belief, this map is substantially correct as noted herein.

James V. Roseman, P.L.S. #70181 — 9 August 2018 Date

This survey is not valid unless it contains the live signature and embossed seal contained hereon. Subsequent revisions to this plan other than by the original surveyor effectually void this certification.

STATE OF CONNECTICUT — JAMES V. ROSEMAN — No. 70181 — LICENSED LAND SURVEYOR

RECEIVED
AUG 10 2018
PLANNING & ZONING DIVISION
Town of West Hartford, CT

1 INCH = 10 FEET

FIELD CREW	DWN BY	DWG. DATE	DWG. NO.
A.R. & M.P.	A.R. & M.P.	20 JUNE 2018	D-295A
FIELD DATE			PROJECT NO.
18 JUNE 2018			2018-113

STADIA ENGINEERING ASSOCIATES, INC.
ENGINEERS · ENVIRONMENTAL PLANNERS · SURVEYORS
Eastern Connecticut Office: 110 Marshall Street, Suite 103, Norwich, Connecticut 06360, (860) 887-4371
Western Connecticut Office: 88 Rt. 41 Hill Road, Southbury, Connecticut 06488, (203) 267-4271
www.stadiaeng.com, stadia@stadiaeng.com

REVISIONS

DATE	REVISION	BY
9 AUGUST 2018	PER PLANNING STAFF & ENGINEERING OFFICE COMMENTS	AJP

SHEET TITLE: SPECIAL USE PERMIT & WETLAND REGULATED ACTIVITY PLAN

PROJECT TITLE: JCC NATURE CENTER
PREPARED FOR
MANDELL GREATER HARTFORD
JEWISH COMMUNITY CENTER, INC
1 ABRAHMS BOULEVARD - WEST HARTFORD, CONNECTICUT

PROJECT NO. 2018-113

PLOT DATE 9 AUGUST 2018

SHEET NO. V-01

© copyright 2018 Stadia Engineering Associates, Inc.

GENERAL NOTES

1. REFER TO SHEET D-01 FOR DETAILS
2. TO AVOID COMPACTING SOIL, HEAVY MACHINERY IS NOT PERMITTED ON THE SITE DURING CONSTRUCTION
3. CLEAN-UP UNDISTURBED WOODS WITH SELECTIVE PRUNING AND UNDERSTORY THINNING, AND REMOVE ALL FOREIGN MATERIAL FROM SITE
4. SALVAGE INDIVIDUAL PLANTS AND FERNS WHERE POSSIBLE FOR USE IN PLANTING ACCORDING TO DESIGN PLAN
5. ALL DISTURBED AREAS NOT OTHERWISE DETAILED SHALL BE SEEDED WITH APPROPRIATE LAWN MIX AND COVERED UNTIL ESTABLISHED
6. EXISTING CANOPY HAS BEEN REMOVED FROM PLAN FOR CLARITY. EXISTING TREE TRUNKS REMAIN

DESIGN PROVIDED BY:

ARTISTIC OUTDOORS

CHING LIN
245 WEST JOHNSON AVENUE - CHESHIRE, CONNECTICUT

PLANT SCHEDULE

ABV	QTY	BOTANICAL NAME/ COMMON NAME	CONT	CAL	SPACING	HEIGHT
CC	13	CORNUS AMOMUM SERICEA / CAYENNE DOGWOOD	3 GAL		6' OC	5'-6'
DP	[illegible]	DENNSTAEDTIA PUNCTILOBULA / HAY-SCENTED FERN	1 GAL		6" OC	2'-3'
AA	2	ARONIA ARBUTIFOLIA / RED CHOKEBERRY	3 GAL		6' OC	6'-8'
CH	3	CLETHRA ALNIFOLIA 'HUMMINGBIRD' / DWARF SUMMERSWEET	3 GAL		6' OC	5'-6'
IV	3	ILEX VERTICILLATA / WINTERBERRY	3 GAL		6' OC	5'-6'
VD	3	VIBURNUM DENTATUM / ARROWWOOD	3 GAL		6' OC	6'-8'
CR	3	CORNUS RACEMOSA / GRAY DOGWOOD	3 GAL		6' OC	10'-12'
AI	3	ASCLEPIAS INCARNATA / SWAMP MILKWEED	PLUGS		18" O.C.	2'-4'
AN	3	ASTER NOVAE-ANGLIAE / NEW ENGLAND ASTER	PLUGS		8" OC	3'-6'
EP	3	EUPATORIUM PERFOLIATUM / COMMON BONESET	PLUGS		8" OC	3'-6'
IN	6	VERNONIA NOVEBORACENSIS / IRONWEED	PLUGS		8" OC	4'-6'
MT	6	CHELONE GLABRA / WHITE TURTLEHEAD	PLUGS		8" OC	2'-3'

SURFACE COVER

QTY	MAT TYPE	REMARKS	AREA (SF)
	PROCESSED GRAVEL & WOODCHIP PLAYGROUND		1,406± SF
	POROUS PAVER WALKWAY		241± SF
1	NEW ENGLAND HEMPEX	1 LB/2,500± SF	1,200± SF
1	NEW ENGLAND SEED - LANDSCAPE ALL PURPOSE GRASS SEED MIX	1 LB/7,000 SF	4,901± SF

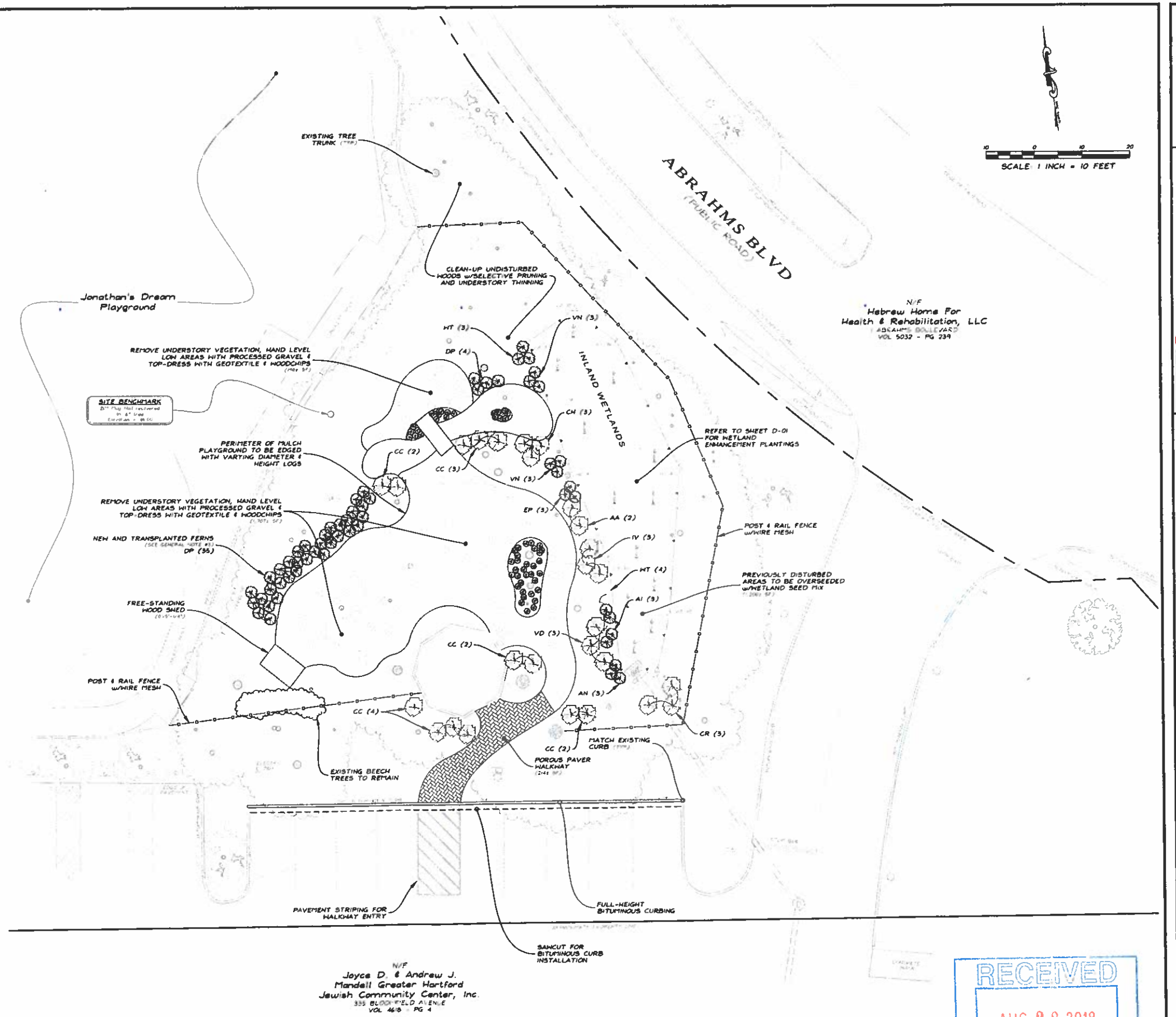

RECEIVED
AUG 28 2018
PLANNING & ZONING DIVISION
Town of West Hartford, CT

PROJECT DATA

FIELD BOOK	BOOK No. 24 Pg. 58-59
DWG FILE	18-113.dwg New Plans
LAYOUT TAB	Site Layout Plan
SHEET No	2 OF 3

1 INCH = 10 FEET

FIELD CREW: A.R. & M.P.
FIELD DATE: 18 JUNE 2018
DRAWN BY: A.R. & M.P.
DRAWN DATE: 20 JUNE 2018
PROJECT No: 2018-113
DWG No: D-295B

STADIA ENGINEERING ASSOCIATES, INC.
ENGINEERS · ENVIRONMENTAL PLANNERS · SURVEYORS
Western Connecticut Office
183 Kenosia Avenue
Danbury, Connecticut 06810
(203) 837-1271
Eastern Connecticut Office
Four Lincoln Circle, Manchester 06040
(860) 512-1173
www.stadiaengineering.com

REVISIONS

SPECIAL USE PERMIT & WETLAND REGULATED ACTIVITY PLAN

JCC NATURE CENTER
PREPARED FOR
MANDELL GREATER HARTFORD JEWISH COMMUNITY CENTER, INC
1 ABRAHAMS BOULEVARD - WEST HARTFORD, CONNECTICUT

PROJECT No: 2018-113
DATE: 9 AUGUST 2018
SHEET No: L-01

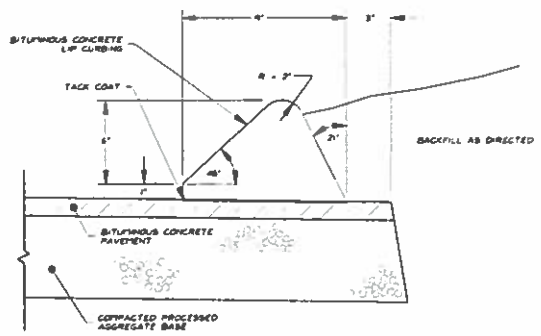

BITUMINOUS CONCRETE LIP CURBING

NOT TO SCALE

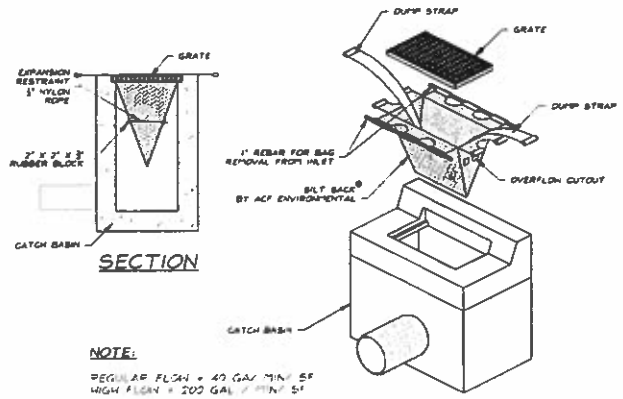

SEDIMENTATION CONTROL SYSTEM AT CATCH BASIN

NOT TO SCALE

ISD

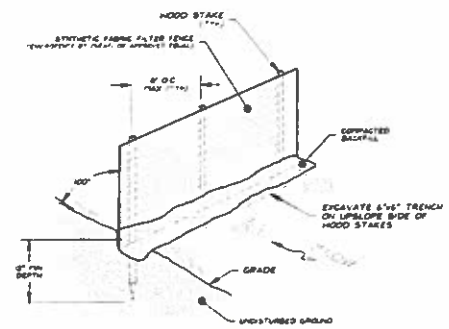

SILT FENCE DETAIL

NOT TO SCALE

SF

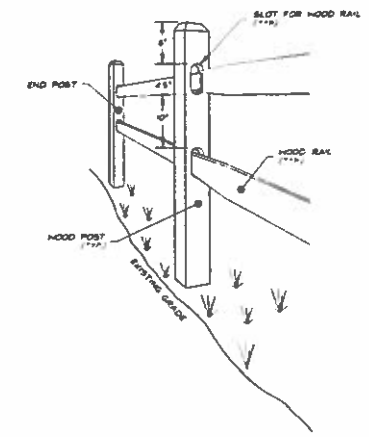

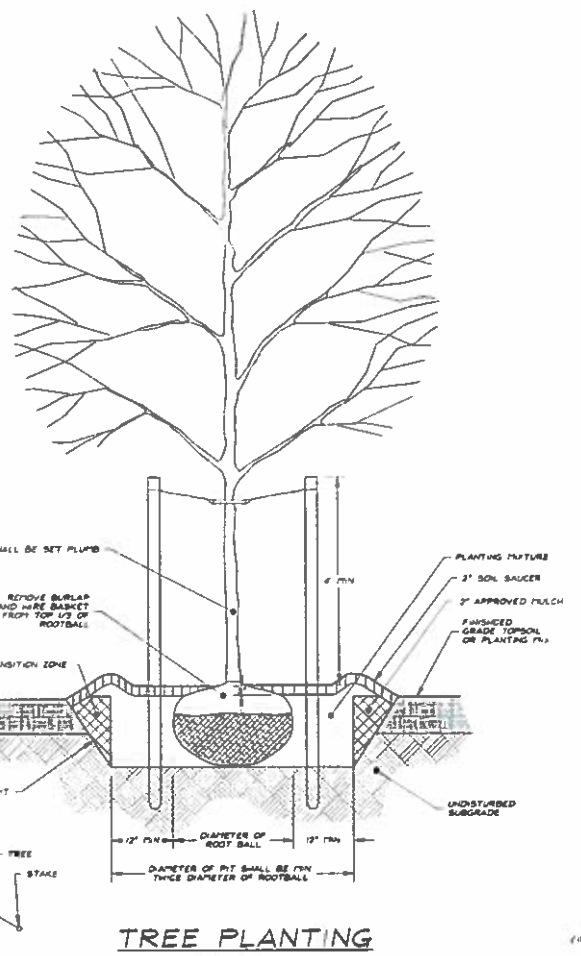

TREE PLANTING

NOT TO SCALE

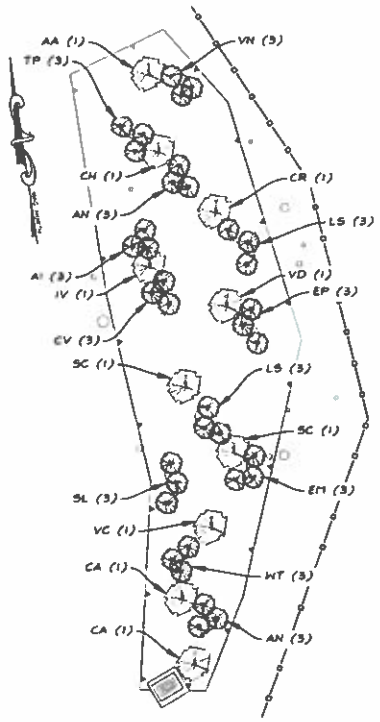

PLANT SCHEDULE

ABV	QTY	BOTANICAL NAME/ COMMON NAME	CONT	SPACING	HEIGHT
SHRUBS					
AA	1	ARONIA ARBUTIFOLIA RED CHOKEBERRY	3 GAL	6' OC	6'-8"
CH	1	CLETHRA ALNIFOLIA 'HUMMINGBIRD' TM SWEET PEPPERBUSH	3 GAL	6' OC	5'-6'
CR	1	CORNUS RACEMOSA GRAY DOGWOOD	3 GAL	6' OC	5'-6'
LS	1	VIBURNUM DENTATUM ARROWWOOD	3 GAL	6' OC	6'-8'
V	1	ILEX VERTICILLATA WINTERBERRY	3 GAL	6' OC	3'-5'
SC	2	SAMBUCUS CANADENSIS AMERICAN BLACK ELDERBERRY	3 GAL	6' OC	5'-6'
VC	1	VACCINIUM CORYMBOSUM HIGHBUSH BLUEBERRY	3 GAL	6' OC	6'-7'
CA	2	CORNUS AMOMUM SILKY DOGWOOD	3 GAL	6' OC	6'-7'
HERBS					
AN	6	ASTER NOVAE-ANGLIAE NEW ENGLAND ASTER	PLUGS	18" OC	3'-4'
WT	3	CHELONE GLABRA WHITE TURTLEHEAD	PLUGS	18" OC	2'-3'
EP	3	EUPATORIUM PERFOLIATUM COMMON BONSET	PLUGS	18" OC	2'-4'
EM	3	EUPATORIUM MACULATUM SPOTTED JOE-PYE WEED	PLUGS	18" OC	3'-4'
AI	3	ASCLEPIAS INCARNATA SWAMP MILKWEED	PLUGS	18" OC	2'-4'
CV	3	CAREX VULPINOIDEA FOX SEDGE	PLUGS	18" OC	[illegible]
LS	6	LOBELIA SIPHILITICA BLUE CARDINAL FLOWER	PLUGS	18" OC	2'-3'
TP	3	THALICTRUM PUBESCENS KING OF THE MEADOW	PLUGS	18" OC	3'-4'
SL	3	SYMPHYOTRICHUM LAEVE SMOOTH ASTER	PLUGS	18" OC	2'-4'
VN	3	VERNONIA NOVEBORACENSIS IRONWEED	PLUGS	18" OC	4'-6'

WETLAND ENHANCEMENT PLANTINGS FOR CONSIDERATION

NOT TO SCALE

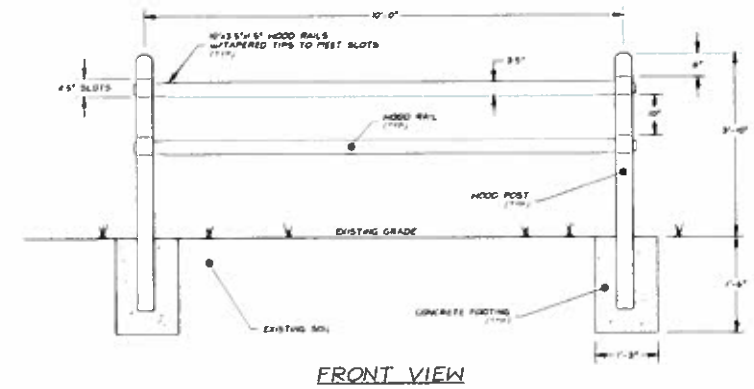

FRONT VIEW

POST & RAIL FENCE w/WIRE MESH

NOT TO SCALE

WOODEN SHED

NOT TO SCALE

NOTE:
TYPICAL 8'x5' WOODEN SHED EXAMPLE

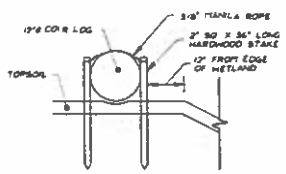

TOP OF SLOPE

COIR LOG

NOT TO SCALE

BALLED AND BURLAPPED MATERIAL

SHRUB PLANTING

NOT TO SCALE

CONTAINER GROWN MATERIAL

PROJECT DATA	
FIELD BOOK	[illegible]
DWG FILE	[illegible]
LAYOUT TAB	[illegible]
SHEET NO	2 OF 3

RECEIVED
AUG 28 2018
PLANNING & ZONING DIVISION
Town of West Hartford, CT

1 INCH = 10 FEET

FIELD BOOK	A.R. & M.P.
FIELD DATE	18 JUNE 2018
DRAWN BY	A.R. & M.P.
DRAWN DATE	20 JUNE 2018
PROJECT NO	2018-113
DWG NO	D-295c

STADIA ENGINEERING ASSOCIATES, INC.
ENGINEERS · ENVIRONMENTAL · PLANNERS · SURVEYORS
Bloomfield Corporate Office: 5 Burnham Street, Suite 103, Bloomfield, CT 06002 (860) 242-4179
Southington Corporate Office: 1 Commerce Park North, Suite 1-B3, Bldg. 1, Southington, CT 06489 (203) 879-4279
Web: www.stadiaeng.com
E-Mail: info@stadiaeng.com

REVISIONS

SPECIAL USE PERMIT & WETLAND REGULATED ACTIVITY PLAN
JCC NATURE CENTER
PREPARED FOR
MANDELL GREATER HARTFORD JEWISH COMMUNITY CENTER, INC
1 ABRAHAMS BOULEVARD – WEST HARTFORD, CONNECTICUT

PROJECT NO 2018-113
DATE 9 AUGUST 2018
SHEET NO D-01