UNIVERSITY OF SAINT JOSEPH

ATHLETIC FIELD RENOVATION PROJECT

1678 ASYLUM AVENUE

WEST HARTFORD, CONNECTICUT 06117

REISSUED FOR IWWA REGULATED ACTIVITY PERMIT (IWW #1100)

&

REISSUED FOR SPECIAL USE PERMIT (#1336)

GENERAL NOTES

1. THE SCOPE OF SITE WORK FOR THIS PROJECT INCLUDES PROTECTION OF EXISTING STRUCTURES AND UTILITIES, AND REINSTATEMENT OF DISTURBED AREAS OF THE SITE TO MATCH EXISTING CONDITIONS. THE EXISTING CONDITIONS SHOWN ON THE PROJECT DRAWINGS ARE TAKEN FROM RECORD DRAWINGS AND HISTORICAL INFORMATION. THE CONTRACTOR SHALL REVIEW THE DRAWINGS AND SITE CONDITIONS PRIOR TO THE START OF WORK AND CONTACT THE PROJECT ARCHITECT IMMEDIATELY IF DISCREPANCIES ARE FOUND.
2. EXISTING UNDERGROUND UTILITIES HAVE BEEN LOCATED FROM HISTORICAL RECORDS AND PREVIOUS DESIGN DRAWINGS. NO GUARANTEE IS MADE THAT THE UTILITIES SHOWN WILL BE FOUND IN THE LOCATIONS INDICATED, OR THAT THE INFORMATION SHOWN IS COMPLETE. INFORMATION ON EXISTING UTILITY LOCATIONS IS PROVIDED FOR REFERENCE ONLY AND THE CONTRACTOR SHALL BE RESPONSIBLE FOR CONFIRMING EXISTING UTILITY LOCATIONS AND DEPTHS AND COORDINATING THE WORK ACCORDINGLY.
3. THE CONTRACTOR SHALL UNDERTAKE TEST PITS AT THE SITE AND ENGAGE PRIVATE UTILITY DETECTION SERVICE, AS NECESSARY, TO ACCURATELY IDENTIFY UTILITIES IN ORDER TO EFFICIENTLY PLAN AND COMPLETE THE WORK.
4. THE CONTRACTOR SHALL PROTECT EXISTING STRUCTURES AND UTILITIES ADJACENT TO THE WORK. ANY DAMAGE TO EXISTING STRUCTURES, ROADS, SIDEWALKS, UTILITIES, OR OTHER SITE FEATURES CAUSED BY THE WORK SHALL BE REPAIRED BY THE CONTRACTOR AT NO COST TO THE OWNER.
5. ANY UTILITY REPAIRS OR RECONFIGURATION REQUIRED AS PART OF THIS PROJECT SHALL CONFORM TO THE STANDARDS AND SPECIFICATIONS OF THE AUTHORITY HAVING JURISDICTION.
6. TEMPORARY WORKS, SUPPORT AND PROTECTION OF STRUCTURES ARE THE RESPONSIBILITY OF THE CONTRACTOR AND THE COSTS SHALL BE CONSIDERED INCIDENTAL TO THE OVERALL PROJECT SUM.
7. ALL WORK SHALL BE UNDERTAKEN IN STRICT ACCORDANCE WITH LOCAL, STATE AND FEDERAL SAFETY STANDARDS.
8. OPEN EXCAVATIONS AND WORK AREAS SHALL BE CLEARLY DELINEATED AND FENCED, AS NECESSARY TO PREVENT UNAUTHORIZED ACCESS
9. DRIVEWAYS, WALKWAYS AND ENTRANCES SERVING PREMISES SHALL BE KEPT CLEAR AND AVAILABLE TO OWNER, OWNER'S EMPLOYEES, AND EMERGENCY VEHICLES, AS NECESSARY TO MAINTAIN THE FUNCTION OF THE FACILITY. COORDINATE ALL WORK WITH OWNER TO ENSURE THAT ADEQUATE ACCESS AND CIRCULATION IS MAINTAINED AT ALL TIMES.
10. DE-WATERING, IF NECESSARY, SHALL BE UNDERTAKEN IN ACCORDANCE WITH LOCAL, STATE AND FEDERAL STANDARDS. NO DISCHARGE OF SEDIMENT LADEN RUNOFF TO SURFACE WATERS, OR THE PIPED STORM DRAIN SYSTEM AT THE SITE SHALL BE ALLOWED.
11. ALL DISTURBED PAVEMENT AREAS, ROADS AND SIDEWALKS SHALL BE REINSTATED TO MATCH EXISTING GRADES, MATERIALS AND DEPTHS.
12. EXISTING PAVEMENT SHALL BE SAW-CUT AT LEAST TWELVE INCHES INTO SOUND MATERIAL TO PROVIDE A CLEAN, STRAIGHT EDGE BETWEEN EXISTING SOUND SURFACE MATERIAL AND THE REPAIRED AREA.
13. A SMOOTH TRANSITION SHALL BE PROVIDED BETWEEN REPAIR WORKS AND EXISTING PAVEMENT. ALL REINSTATED AREAS SHALL BE GRADED TO PITCH UNIFORMLY TO ENSURE POSITIVE DRAINAGE.
14. LIKE-NEW" IS DEFINED AS A COMPLETE REPLACEMENT OR REMEDIATION OF ANY DISTURBED AREAS RESULTING FROM CONSTRUCTION ACTIVITIES. APPROVAL OF AREAS TO BE RESTORED TO A "LIKE-NEW" CONDITION ARE AT THE DISCRETION OF THE OWNER.

LEGEND

— CF — CF — CF —	CHAIN LINK CONSTRUCTION FENCE (6.0' HEIGHT)
— SF — SF — SF —	SILT FENCE
	REMOVE SITE AMENITY
	HAY BALES
	CHAIN LINK FENCING
	BALL SAFETY NETTING
— NSD — NSD — NSD —	STORM DRAIN PIPING
— NW — NW — NW —	WATER LINE PIPING
XX.X'	LINEAR DIMENSION
RXX.X'	RADIAL DIMENSION
	STABILIZED CONSTRUCTION ENTRANCE
	EROSION CONTROL BLANKET
	SOD
	SYNTHETIC TURF
	CONCRETE PAVEMENT
	FLUSH
	DIRECTION OF DRAINAGE FLOW
XXX.XX	SPOT ELEVATION

LIST OF DRAWINGS

GENERAL:

GI001	GENERAL INFORMATION & NOTES
-	IMPROVEMENT LOCATION SURVEY

CIVIL/LANDSCAPE:

C-001	SITE CONTEXT, STAGING & ACCESS PLAN
CD101	SITE DEMOLITION PLAN
CE101	SITE EROSION & SEDIMENTATION CONTROL PLAN
CE501	SITE EROSION & SEDIMENTATION CONTROL DETAILS
CL101	SITE LAYOUT & MATERIALS PLAN
CL501	SITE DETAILS
CG101	SITE GRADING PLAN
CU101	SITE UTILITY PLAN
CU501	SITE UTILITY DETAILS

ELECTRICAL:

E-001	ELECTRICAL LEGEND & NOTES
ES100	ELECTRICAL SITE POWER PLAN
ES101	FIELD LIGHTING PHOTOMETRIC PLAN

GENERAL SITE ABBREVIATIONS

CB	CATCH BASIN
DMH	DRAINAGE MAN HOLE
INV IN	INVERT IN
INV OUT	INVERT OUT
TC	TOP OF CURB
TF	TOP OF FRAME
TYP	TYPICAL

PROJECT INFORMATION

OWNER:

UNIVERSITY OF SAINT JOSEPH
1678 ASYLUM AVENUE
WEST HARTFORD, CT 06117

ARCHITECT/ENGINEER OF RECORD:

SMRT ARCHITECTS AND ENGINEERS, PC
200 BRICKSTONE SQUARE, STE. 303
ANDOVER, MA 01810

ZONING/ASSESSORS:

ZONE:	R-10
PARCEL ID:	0181 2 16780001
MAP No.:	G6
ZONING LOT AREA:	88.48 ACRES
LAND CONSERVATION:	NONE
NATURAL RESOURCES:	NONE
AQUIFER PROTECTION:	NONE
WATER RESOURCES:	TROUT BROOK WATERSHED
LAND USE:	INSTITUTIONAL / PRIVATE

PROJECT LOCUS MAPS

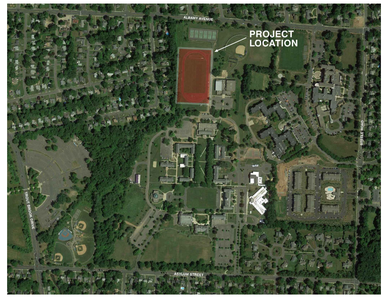

REV	DESCRIPTION	DATE
2	REISSUED FOR PERMITTING	03-28-19
1	REISSUED FOR PERMITTING	03-22-19
0	ISSUED FOR PERMITTING	02-20-19

REISSUED FOR PERMITTING
03-28-19

CURRENT ISSUE STATUS:

STATE OF CONNECTICUT
MELISSA A. FLYNN
31984
LICENSED
PROFESSIONAL ENGINEER
3/28/19

SMRT Architects and Engineers
200 Brickstone Square, Suite 303
Andover, Massachusetts 01810
1.877.700.7678
www.smrtinc.com
ARCHITECTURE | ENGINEERING | PLANNING | INTERIORS | ENERGY

UNIVERSITY OF SAINT JOSEPH
ATHLETIC FIELD RENOVATIONS

1678 ASYLUM AVE., W. HARTFORD, CT 06117

GENERAL INFORMATION & NOTES

SHEET TITLE:

SCALE:

PROJECT MANAGER:	RFW	PROJECT NO:	19014
A/E OF RECORD:	MAF		
JOB CAPTAIN:	–		
DRAWN BY:	JSM		
SMRT FILE:	GI001-18049.dwg	SHEET No.	GI001

© COPYRIGHT 2019 SMRT INC.

NOT FOR CONSTRUCTION

24x36

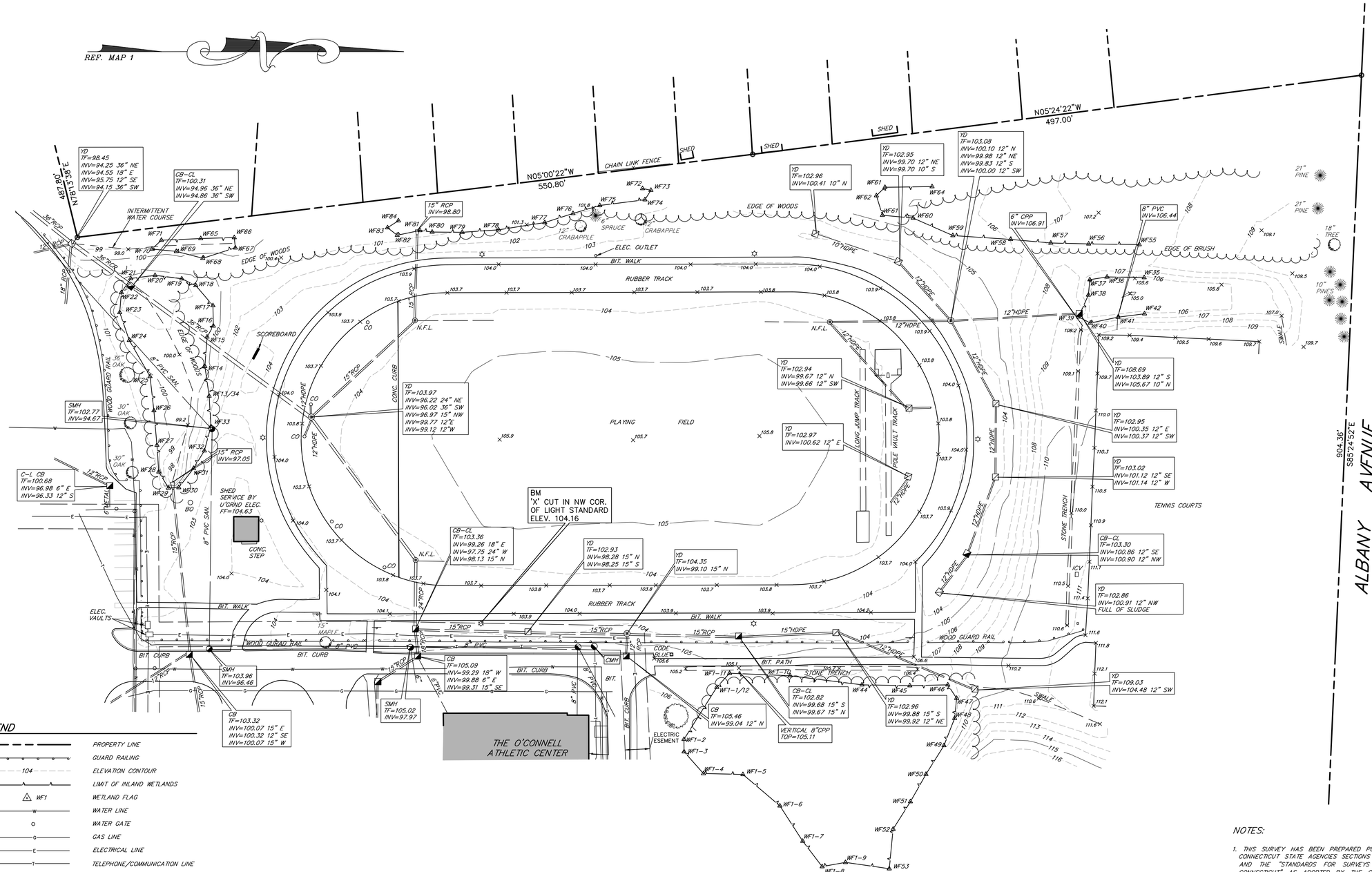

LEGEND

	PROPERTY LINE
	GUARD RAILING
104	ELEVATION CONTOUR
	LIMIT OF INLAND WETLANDS
WF1	WETLAND FLAG
	WATER LINE
	WATER GATE
	GAS LINE
	ELECTRICAL LINE
	TELEPHONE/COMMUNICATION LINE
	MANHOLE
	CATCH BASIN
	YARD DRAINS
CO	CLEAN OUT
	TREES
	LIGHT POLE
× 101.3	SPOT ELEVATION
	SIGN
CONC.	CONCRETE
BIT.	BITUMINOUS
TF	TOP OF FRAME ELEVATION
INV	INVERT ELEVATION

GRAPHIC SCALE

40 0 20 40 80 160

(IN FEET)
1 inch = 40 ft.

THIS DRAWING HAS BEEN PREPARED BASED, IN PART, ON INFORMATION PROVIDED BY OTHERS RELATING TO THE LOCATION OF UNDERGROUND SERVICES. WE CAN NOT VERIFY THE ACCURACY OF THIS INFORMATION AND SHALL NOT BE HELD RESPONSIBLE FOR ANY ERRORS OR OMISSIONS WHICH MAY BE INCORPORATED HEREIN AS A RESULT.
INDICATED UNDERGROUND UTILITIES ARE BASED ON AVAILABLE DATA. THE LOCATIONS ARE APPROXIMATE AND ALL UTILITIES MAY NOT BE SHOWN.
CALL "CALL B-4-U DIG" AT 1-800-922-4455 PRIOR TO ANY EXCAVATION.

REFERENCE MAPS:

1. "SITE UTILITY PLAN, INFRASTRUCTURE IMPROVEMENT PROJECT, UNIVERSITY OF SAINT JOSEPH, 1678 ASYLUM AVE. WEST HARTFORD, CT 06117", DRAWING NO. SU-1.0 AND SU-1.1, DATE 05-21-18, SCALE 1"=40', BY BVH INTEGRATED SERVICES.
2. "TOPOGRAPHIC SURVEY, PLAN PREPARED FOR SAINT JOSEPH COLLEGE, 1678 ASYLUM AVENUE, WEST HARTFORD, CONN.", DATE: 10-19-2007, SCALE: 1"=40', BY MEEHAN & GOODIN.
3. "PROPERTY/BOUNDARY SURVEY, PLAN PREPARED FOR SAINT JOSEPH COLLEGE, 1678 ASYLUM AVENUE, WEST HARTFORD, CT.", SCALE 1"=100', DATE: FEB. 18, 2008, BY MEEHAN & GOODIN.
4. "EASEMENT PLAN, MAP SHOWING EASEMENT AREA TO BE GRANTED TO THE CONNECTICUT LIGHT AND POWER COMPANY ACROSS THE PROPERTY OF SAINT JOSEPH COLLEGE, 1678 ASYLUM AVENUE, WEST HARTFORD, CONN., CL&P FILE NO. EB056, DATE: 07-10-2008", BY MEEHAN & GOODIN.
5. "MAP SHOWING CROSS EASEMENTS AND UTILITIES, 243 STEELE ROAD, WEST HARTFORD, CONNECTICUT", SCALE 1"=40', DATE APRIL 17, 2015, BY MILONE & MACBROOM.

NOTES:

1. THIS SURVEY HAS BEEN PREPARED PURSUANT TO THE REGULATIONS OF CONNECTICUT STATE AGENCIES SECTIONS 20-300b-1 THROUGH 20-300b-20 AND THE "STANDARDS FOR SURVEYS AND MAPS IN THE STATE OF CONNECTICUT" AS ADOPTED BY THE CONNECTICUT ASSOCIATION OF LAND SURVEYORS, INC. ON SEPTEMBER 26, 1996;

   TYPE OF SURVEY: IMPROVEMENT LOCATION SURVEY

   CLASS OF HORIZONTAL ACCURACY: A-2
   CLASS OF VERTICAL ACCURACY: V-2
   CLASS OF TOPOGRAPHIC ACCURACY: T-2
   SURFACE UTILITY ACCURACY: A-2
   UNDERGROUND UTILITY ACCURACY: D (COMPILED)
2. HORIZONTAL DATUM BASED ON REFERENCE MAP 1.
3. PROPERTY LINES BASED ON REFERENCE MAP 3.
4. ELEVATIONS BASED ON REFERENCE MAP 1.
5. LIMIT OF INLAND WETLANDS FIELD LOCATED BY SOIL SCIENCE AND ENVIRONMENTAL SERVICES, INC.
6. THIS MAP IS VALID ONLY IF IT BEARS THE ORIGINAL SIGNATURE AND EMBOSSED SEAL OF THE UNDERSIGNED LAND SURVEYOR.

TO MY KNOWLEDGE AND BELIEF, THIS MAP IS SUBSTANTIALLY CORRECT AS NOTED HEREON.

SURVEYOR'S SIGNATURE DATE LICENSE NUMBER 14649

07172-TRACK2.DWG 07172

THE BONGIOVANNI GROUP, INC.
LAND SURVEYORS
170 Pane Road
Newington, Conn. 06111
TEL. (860) 666-0134
FAX (860) 666-3830

Scale: 1"=40'
Checked: AB
Date: 12-07-18
Drawn: CMS/DJD

Revision	Date
ADDITIONAL TOPOGRAPHY ADDED	1-18-19

TRACK & FIELD AREA ON THE PROPERTY OF UNIVERSITY OF SAINT JOSEPH 1678 ASYLUM AVENUE WEST HARTFORD, CONNECTICUT

IMPROVEMENT LOCATION SURVEY

Sheet 1 of 1

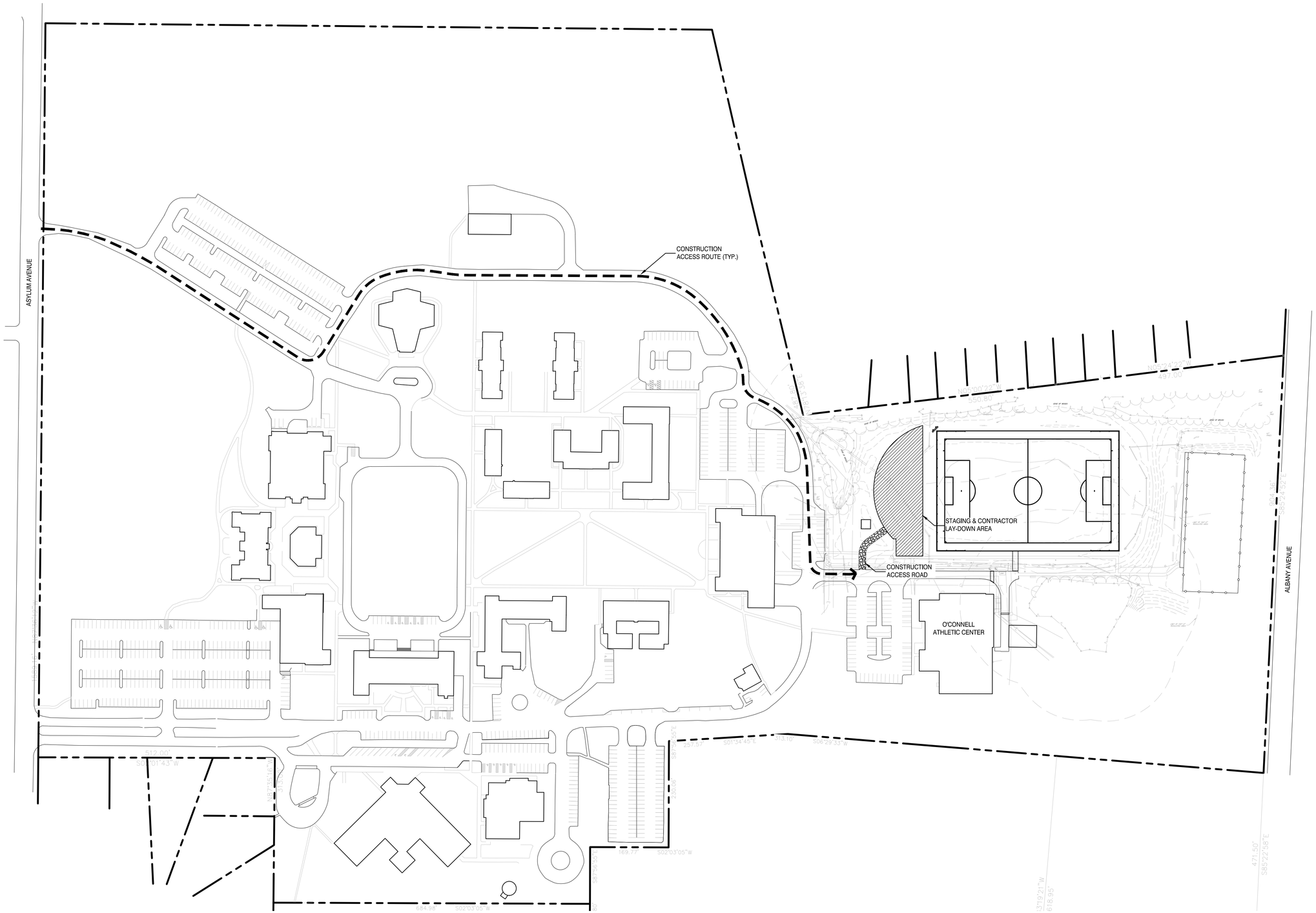

REV	DESCRIPTION	DATE
2	REISSUED FOR PERMITTING	03-28-19
1	REISSUED FOR PERMITTING	03-22-19
0	ISSUED FOR PERMITTING	02-20-19

REISSUED FOR PERMITTING
03-28-19

CURRENT ISSUE STATUS:

TRUE NORTH:

STATE OF CONNECTICUT
MELISSA A. FLYNN
31004
LICENSED
PROFESSIONAL ENGINEER
3/28/19

SMRT Architects and Engineers
200 Brickstone Square, Suite 303
Andover, Massachusetts 01810
1.877.700.7678
www.smrtinc.com
ARCHITECTURE | ENGINEERING | PLANNING | INTERIORS | ENERGY
SMRT

UNIVERSITY OF SAINT JOSEPH ATHLETIC FIELD RENOVATIONS

1678 ASYLUM AVE., W. HARTFORD, CT 06117

SITE CONTEXT, STAGING & ACCESS PLAN

SHEET TITLE:

0' 50' 100' 200' 300'

SCALE: 1"=100'-0"

PROJECT MANAGER:	RFW	PROJECT NO:	19014
A/E OF RECORD:	MAF		
JOB CAPTAIN:	–		
DRAWN BY:	JSM		
SMRT FILE:	C-001-19014.dwg	SHEET No.	C-001

© COPYRIGHT 2019 SMRT INC.

NOT FOR CONSTRUCTION

24x36

NOTE:
ALL EROSION & SEDIMENTATION CONTROL DEVICES SHALL BE INSTALLED PRIOR TO THE START OF CONSTRUCTION OPERATIONS

LIMIT OF WETLAND (TYP.)
REFER TO DRAWING CE101 FOR ALL EROSION & SEDIMENTATION CONTROL DEVICES (TYP.)
REMOVE ASPHALT WALK (TYP.)
REMOVE AND DISPOSE TRACK SURFACING & ASPHALT PAVEMENT. TRACK SECTION BASE MATERIAL TO BE SALVAGED AND RE-USED UNDER SYNTHETIC TURF FIELD (TYP.)
LIMIT OF WETLAND (TYP.)
LIMIT OF WETLAND (TYP.)
FINE/CLEAN SAWCUT ON EDGE OF TRACK
PROTECT EX. YARD DRAIN TO REMAIN. ADJUST INVERT OUT TO ACCOMMODATE NEW 12" HDPE PIPE
LIMIT OF WETLAND (TYP.)
REMOVE DRAINAGE STRUCTURES & PIPING WITHIN FIELD; BACKFILL WITH APPROVED ON-SITE BORROW MATERIAL OR APPROVED BANK RUN GRAVEL
CONCRETE CONTAINMENT CURB TO REMAIN
PROTECT EX. 15" DRAIN TO REMAIN
PROTECT EX. YARD DRAIN TO REMAIN; PLUG INVERT OUT OPENING; RE-USE 12" (SW) INVERT FOR NEW INVERT OUT; SEE CU101.
LIMIT OF WETLAND (TYP.)
LIMIT OF WETLAND (TYP.)
SAWCUT PAVEMENT TO ACCOMMODATE DRAINAGE TRENCH. BACKFILL WITH DENSE GRADE AFTER INSTALLATION OF PIPE
REMOVE, SALVAGE, & REINSTALL SCOREBOARD; SEE DRAWING CL101 FOR LOCATION
REMOVE AND DISPOSE OF EXISTING DRAINAGE STRUCTURE. (SEE CU101 FOR REPLACEMENT STRUCTURE).
REMOVE EX. HEADER PIPE IN FIELD. BACKFILL WITH APPROVED ON-SITE BORROW MATERIAL OR APPROVED BANK RUN GRAVEL.
REMOVE LONG JUMP & POLE VAULT LANES/LANDING AREAS/PITS
REMOVE ALL DRAINAGE AND STRUCTURES ASSOCIATED WITH LONG JUMP & POLE VAULT LANES/LANDING AREAS/PITS
ABANDON EX. 15" DRAIN TO PLACE
REMOVE LIGHT POLE & ASSOCIATED ELECTRICAL; REMOVE, SALVAGE, & DELIVER FIXTURES TO OWNER (TYP. OF 6)
EXISTING SECTION OF TRACK & 'D-AREA' TO REMAIN (STAGING & LAY-DOWN AREA)
REMOVE NATURAL GRASS ATHLETIC FIELD & ASSOCIATED TOPSOIL & IRRIGATION
REMOVE EX. HEADER PIPE IN FIELD. BACKFILL WITH APPROVED ON-SITE BORROW MATERIAL OR APPROVED BANK RUN GRAVEL
LIMIT OF 150'-0" REGULATED AREA
FINE/CLEAN SAWCUT ON EDGE OF TRACK
REFER TO DRAWING CE101 FOR ALL EROSION & SEDIMENTATION CONTROL DEVICES (TYP.)
REMOVE ASPHALT CURB
FINE/CLEAN SAWCUT (TYP.)
REMOVE PAVEMENT
SECTION OF EX. GUARDRAIL TO BE REMOVED FOR CONSTRUCTION OF EMERGENCY ACCESS DRIVE
REFER TO DRAWING CE101 FOR ALL EROSION & SEDIMENTATION CONTROL DEVICES (TYP.)
REMOVE ASPHALT CURB
FINE/CLEAN SAWCUT (TYP.)
REMOVE PAVEMENT
LIMIT OF WETLAND (TYP.)
LIMIT OF 150'-0" REGULATED AREA

REV	DESCRIPTION	DATE
2	REISSUED FOR PERMITTING	03-28-19
1	REISSUED FOR PERMITTING	03-22-19
0	ISSUED FOR PERMITTING	02-20-19

REISSUED FOR PERMITTING
03-28-19

CURRENT ISSUE STATUS:

TRUE NORTH:

STATE OF CONNECTICUT
MICHAEL A. FRANK
LICENSED PROFESSIONAL ENGINEER
3/28/19

SMRT Architects and Engineers
200 Brickstone Square, Suite 303
Andover, Massachusetts 01810
1.877.700.7678
www.smrtinc.com
ARCHITECTURE | ENGINEERING | PLANNING | INTERIORS | ENERGY

UNIVERSITY OF SAINT JOSEPH ATHLETIC FIELD RENOVATIONS

1678 ASYLUM AVE., W. HARTFORD, CT 06117

SITE DEMOLITION PLAN

SHEET TITLE:

0' 15' 30' 60' 90'
SCALE: 1"=30'-0"

PROJECT MANAGER:	RFW	PROJECT NO:	19014
A/E OF RECORD:	MAF		
JOB CAPTAIN:	–		
DRAWN BY:	JSM		
SMRT FILE:	CD101-19014.dwg	SHEET No.	CD101

© COPYRIGHT 2019 SMRT INC.

NOT FOR CONSTRUCTION

24x36

NOTES:

1. ALL EROSION & SEDIMENTATION CONTROL DEVICES SHALL BE INSTALLED PRIOR TO THE START OF CONSTRUCTION OPERATIONS.
2. REFER TO SPECIFICATIONS ON CE501 FOR DEWATERING OPERATIONS IF REQUIRED.
3. ADDITIONAL EROSION & SEDIMENT CONTROL DEVICES SHALL BE INSTALLED AROUND ANY DEWATERING ACTIVITY AREA.

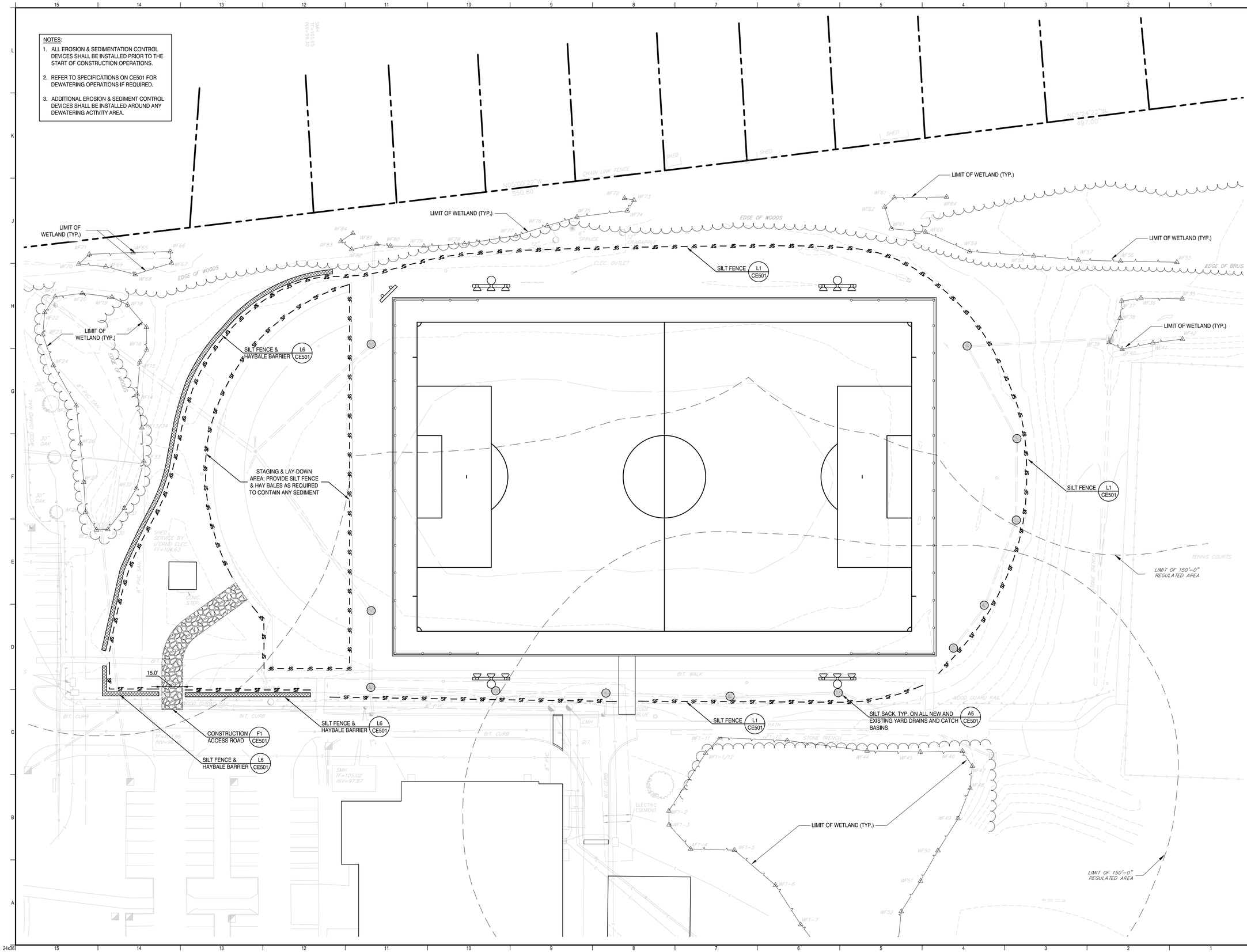

REV	DESCRIPTION	DATE
2	REISSUED FOR PERMITTING	03-28-19
1	REISSUED FOR PERMITTING	03-22-19
0	ISSUED FOR PERMITTING	02-20-19

REISSUED FOR PERMITTING
03-28-19

CURRENT ISSUE STATUS:

TRUE NORTH:

STATE OF CONNECTICUT · MASSACHUSETTS · 31981 · LICENSED PROFESSIONAL ENGINEER
3/28/19

SMRT Architects and Engineers
200 Brickstone Square, Suite 303
Andover, Massachusetts 01810
1.877.700.7678
www.smrtinc.com
ARCHITECTURE | ENGINEERING | PLANNING | INTERIORS | ENERGY

UNIVERSITY OF SAINT JOSEPH ATHLETIC FIELD RENOVATIONS

1678 ASYLUM AVE., W. HARTFORD, CT 06117

SITE EROSION & SEDIMENT CONTROL PLAN

SHEET TITLE:

0' 15' 30' 60' 90'

SCALE: 1"=30'-0"

PROJECT MANAGER:	RFW	PROJECT NO:	19014
A/E OF RECORD:	MAF		
JOB CAPTAIN:	–		
DRAWN BY:	JSM		
SMRT FILE:	CE101-19014.dwg	SHEET No.	CE101

© COPYRIGHT 2019 SMRT INC

NOT FOR CONSTRUCTION

24x36

TEMPORARY EROSION AND SEDIMENTATION CONTROL MEASURES INCLUDE THE USE OF STABILIZED CONSTRUCTION ACCESS DRIVE, SILTATION FENCE, RIPRAP STONE, GEOTEXTILE FABRIC, CRUSHED STONE WORKING PADS, CATCH BASIN SEDIMENT COLLECTION BAGS, EROSION CONTROL BLANKET, AND TEMPORARY SEEDING AND MULCHING AS REQUIRED. PERMANENT DEVICES INCLUDE STORMWATER MANAGEMENT BMPS, THE USE OF RIP RAP AT EXPOSED STORM DRAIN AND CULVERT INLETS AND OUTLETS, RIP RAPPED SLOPES, AND PERMANENT VEGETATION.

THE CONTRACTOR SHALL FAMILIARIZE HIMSELF WITH ALL APPLICABLE CRITERIA AND CONDITIONS OF THE PERMIT ISSUED BY AN AUTHORITY HAVING JURISDICTION (AHJ) PRIOR TO BEGINNING ANY WORK AT THE SITE.

GENERAL

1. IT IS ANTICIPATED THAT CONSTRUCTION MAY BEGIN AS SOON AS POSSIBLE FOLLOWING RECEIPT OF NECESSARY PERMITS. CONSTRUCTION SCHEDULE TO BE APPROVED BY OWNER PRIOR TO MOBILIZATION.
2. ALL SOIL EROSION AND SEDIMENT CONTROL MEASURES SHALL BE CONSTRUCTED AND MAINTAINED IN ACCORDANCE WITH THE 2004 CONNECTICUT STORMWATER QUALITY MANUAL; PER CT D.E.E.P REQUIREMENTS, OR AS CURRENTLY REVISED, OR U.S. ENVIRONMENTAL PROTECTION AGENCY PUBLICATION 832/R-92-005 (SEPTEMBER, 1992) STORM WATER MANAGEMENT FOR CONSTRUCTION, CHAPTER 3, WHICHEVER IS MORE STRINGENT.
3. ANY ADDITIONAL EROSION AND SEDIMENTATION CONTROL DEEMED NECESSARY BY THE OWNER'S REPRESENTATIVE AND/OR MUNICIPAL OFFICIALS SHALL BE INSTALLED BY THE CONTRACTOR.
4. THE CONTRACTOR IS RESPONSIBLE FOR ALL FINES RESULTING FROM EROSION OR SEDIMENTATION FROM THE SITE TO SURROUNDING PROPERTIES, WATER BODIES, OR WETLANDS AS A RESULT OF THIS PROJECT.
5. THE CONTRACTOR SHALL BE RESPONSIBLE FOR THE REPAIR/REPLACEMENT/MAINTENANCE OF ALL EROSION CONTROL MEASURES UNTIL ALL DISTURBED AREAS ARE STABILIZED TO THE SATISFACTION OF THE ABOVE PERSONNEL. DESCRIPTIONS OF ACCEPTABLE PERMANENT STABILIZATION FOR VARIOUS COVER TYPES FOLLOWS:
   A. FOR SEEDED AREAS, PERMANENT STABILIZATION MEANS A 90% COVER OF THE DISTURBED AREA WITH MATURE, HEALTHY PLANTS WITH NO EVIDENCE OF WASHING OR RILLING OF THE TOPSOIL.
   B. FOR SODDED AREAS, PERMANENT STABILIZATION MEANS THE COMPLETE BINDING OF THE SOD ROOTS INTO THE UNDERLYING SOIL WITH NO SLUMPING OF THE SOD OR DIE-OFF.
   C. FOR MULCHED AREAS, PERMANENT MULCHING MEANS TOTAL COVERAGE OF THE EXPOSED AREA WITH AN APPROVED MULCH MATERIAL. EROSION CONTROL MIX MAY BE USED AS MULCH FOR PERMANENT STABILIZATION ACCORDING TO THE APPROVED APPLICATION RATES AND LIMITATIONS.
   D. FOR AREAS STABILIZED WITH RIP RAP, PERMANENT STABILIZATION MEANS THAT SLOPES STABILIZED WITH RIP RAP HAVE AN APPROPRIATE BACKING OF A WELL-GRADED GRAVEL OR APPROVED GEOTEXTILE TO PREVENT SOIL MOVEMENT FROM BEHIND THE RIP RAP. STONE MUST BE SIZED APPROPRIATELY.
   E. PAVED AREAS: FOR PAVED AREAS, PERMANENT STABILIZATION MEANS THE PLACEMENT OF THE COMPACTED GRAVEL SUBBASE IS COMPLETED.
6. REINFORCED VEGETATED SLOPES SHALL BE CONSTRUCTED WITH SUITABLE ON-SITE SOIL MATERIAL COMPACTED IN MAXIMUM EIGHT INCH LIFTS TO 90% MAXIMUM DRY DENSITY. THE SURFACE SHALL BE SEEDED AND IMMEDIATELY COVERED WITH A 100% BIODEGRADABLE DOUBLE NET EROSION BLANKET (AMERICAN GREEN BIONET C-125BN, EAST COAST EROSION BLANKETS ECC-2B, OR APPROVED EQUAL).

GEOTEXTILE NOTES

1. GEOTEXTILE SEPARATION FABRIC SHALL BE A WOVEN GEOTEXTILE WITH AN APPARENT OPENING SIZE OF 40 (US STANDARD SIEVE) (PER ASTM D4751) THAT MEETS THE REQUIREMENTS FOR A CLASS 2 SEPARATION GEOTEXTILE PER AASHTO M288.96. GEOTEXTILE SEPARATION FABRIC SHALL BE MIRAFI® 500X OR APPROVED EQUAL. REFER TO SPECIFICATION SECTION 312000, 2.2, D.
2. GEOTEXTILE DRAINAGE FABRIC SHALL BE A NONWOVEN GEOTEXTILE MANUFACTURED FOR USE IN SUBSURFACE DRAINAGE APPLICATIONS. THE MATERIAL SHALL HAVE AN APPARENT OPENING SIZE OF 70 (US STANDARD SIEVE) (PER ASTM D4751), A PERMITTIVITY OF 1.8/SEC OR GREATER (PER ASTM D4491-99A) AND RETAIN A MINIMUM OF 70% STRENGTH AT 500 HOURS UV EXPOSURE (PER ASTM D4355). GEOTEXTILE DRAINAGE FABRIC SHALL BE MIRAFI® 140N, CONTECH® C-35NW, OR APPROVED EQUAL. REFER TO SPECIFICATION SECTION 312000, 2.2, C.

DEWATERING NOTES

1. CONTRACTOR SHALL EMPLOY A DEWATERING SYSTEM THAT ACHIEVES THE FOLLOWING FUNCTIONS DURING CONSTRUCTION:
   A. DEVELOP A SUBSTANTIALLY DRY & STABLE SUBGRADE DURING EXECUTION OF THE WORK.
   B. PREVENT DAMAGE TO STRUCTURES ADJACENT TO THE WORK.
   C. RETAIN SEDIMENTS ON-SITE & WITHIN THE WORK AREA. DEWATERING OPERATIONS SHALL BE SUSPENDED IF THE TURBIDITY OF DISCHARGES TO THE DOWNSTREAM DRAINAGE SYSTEM IS INCREASED ABOVE AMBIENT LEVELS.
2. FLOCCULANTS MAY BE USED TO CONTROL THE TURBIDITY OF DISCHARGE WATER. REFER TO THE 2004 CONNECTICUT STORMWATER QUALITY MANUAL, PER D.E.E.P REQUIREMENTS, FOR RECOMMENDATIONS & SPECIFICATIONS.
3. SURFACE WATER ENTERING THE CONSTRUCTION SITE SHALL BE INTERCEPTED & DIVERTED AROUND THE WORK AREA THROUGH THE USE OF DIKES, CURB WALLS, DITCHES, SUMPS, PUMPING, OR OTHER APPROVED MEANS.
4. ANY ENFORCEMENT ACTIONS OR FINES RESULTING FROM THE IMPROPER DISCHARGE OF TURBID WATER SEDIMENT TO DOWNSTREAM AREAS SHALL BE THE SOLE RESPONSIBILITY OF THE CONTRACTOR.
5. DIRT BAGS & TEMPORARY DEWATERING PONDS SHALL BE CONSTRUCTED & MAINTAINED AS NEEDED TO CAPTURE & TREAT PUMPATE FROM DEWATERED AREAS.
6. ADDITIONAL EROSION & SEDIMENT CONTROL DEVICES SHALL BE INSTALLED AROUND ANY DEWATERING ACTIVITIES.

TEMPORARY STABILIZATION

1. MULCH ALL AREAS SEEDED SO THAT SOIL IS NOT VISIBLE THROUGH THE MULCH REGARDLESS OF THE APPLICATION RATE.
2. DITCH LININGS, STONE CHECK DAMS, AND RIP RAP INLET AND OUTLET PROTECTION SHALL BE INSTALLED WITHIN 48 HOURS OF COMPLETING THE GRADING OF THAT SECTION OF DITCH OR INSTALLATION OF CULVERT.
3. RIP RAP REQUIRED AT CULVERTS AND STORM DRAIN INLETS AND OUTLETS SHALL CONSIST OF FIELD STONE OR ROUGH UNHEWN QUARRY STONE OF APPROXIMATELY RECTANGULAR SHAPE.
4. EROSION CONTROL BLANKET SHALL BE INSTALLED ON ALL PERMANENT SLOPES STEEPER THAN 15%, IN THE BASE OF DITCHES NOT OTHERWISE PROTECTED, AND ANY DISTURBED AREAS WITHIN 100 FEET OF A PROTECTED NATURAL RESOURCE (E.G. WETLANDS AND WATER BODIES). EROSION CONTROL BLANKET SHALL BE INSTALLED IN ACCORDANCE WITH MANUFACTURER'S RECOMMENDATIONS.
5. TEMPORARY CONTROL MEASURES, SUCH AS SILT FENCE, SHALL BE REMOVED WITHIN 30 DAYS AFTER PERMANENT STABILIZATION IS ATTAINED.

HOUSEKEEPING

1. SPILL PREVENTION. CONTROLS MUST BE USED TO PREVENT POLLUTANTS FROM CONSTRUCTION AND WASTE MATERIALS STORED ON-SITE, INCLUDING STORAGE PRACTICES TO MINIMIZE EXPOSURE OF THE MATERIALS TO STORM WATER, AND APPROPRIATE SPILL PREVENTION, CONTAINMENT, AND RESPONSE PLANNING AND IMPLEMENTATION.
2. FUGITIVE SEDIMENT AND DUST. ACTIONS MUST BE TAKEN TO ENSURE THAT ACTIVITIES DO NOT RESULT IN NOTICEABLE EROSION OF SOILS OR FUGITIVE DUST EMISSIONS DURING OR AFTER CONSTRUCTION. OIL MAY NOT BE USED FOR DUST CONTROL.
3. DEBRIS AND OTHER MATERIAL. LITTER, CONSTRUCTION DEBRIS, AND CONSTRUCTION CHEMICALS EXPOSED TO STORM WATER, MUST BE PREVENTED FROM BECOMING A POLLUTANT SOURCE.
4. COMPLY WITH THE REQUIREMENTS OF CONSTRUCTION WASTE MANAGEMENT SPECIFICATION SECTION, FOR REMOVAL AND DISPOSAL OF CONSTRUCTION DEBRIS AND WASTE.
5. TRENCH OR FOUNDATION DE-WATERING. THE COLLECTED WATER REMOVED FROM THE PONDED AREA, EITHER THROUGH GRAVITY OR PUMPING, MUST BE SPREAD THROUGH NATURAL WOODED BUFFERS OR REMOVED AREAS THAT ARE SPECIFICALLY DESIGNATED TO COLLECT THE MAXIMUM AMOUNT OF SEDIMENT POSSIBLE, LIKE A COFFER DAM SEDIMENTATION BASIN. AVOID ALLOWING THE WATER TO FLOW OVER DISTURBED AREAS OF THE SITE.

INSPECTION AND MAINTENANCE

1. INSPECT DISTURBED AND IMPERVIOUS AREAS, EROSION AND STORM WATER CONTROL MEASURES, AREAS USED FOR STORAGE THAT ARE EXPOSED TO PRECIPITATION, AND LOCATIONS WHERE VEHICLES ENTER OR EXIT THE SITE AT LEAST ONCE A WEEK AND BEFORE AND AFTER A STORM EVENT, PRIOR TO COMPLETION OF PERMANENT STABILIZATION. THE IDENTITY OF THE INSPECTOR MUST BE RECORDED ON THE LOG. IF BEST MANAGEMENT PRACTICES (BMPS) NEED TO BE MODIFIED OF IF ADDITIONAL BMPS ARE NECESSARY, IMPLEMENTATION MUST BE COMPLETED WITHIN 7 CALENDAR DAYS AND PRIOR TO ANY STORM EVENT (RAINFALL). ALL MEASURES MUST BE MAINTAINED IN EFFECTIVE OPERATING CONDITION UNTIL AREAS ARE PERMANENTLY STABILIZED.
2. AN INSPECTION AND MAINTENANCE LOG MUST BE KEPT SUMMARIZING THE DETAILS OF THE INSPECTION, NAME AND QUALIFICATIONS OF THE PERSON PERFORMING THE INSPECTION, DATE, AND MAJOR OBSERVATIONS RELATING TO OPERATION OF EROSION AND SEDIMENTATION CONTROLS AND POLLUTION PREVENTION MEASURES. MAJOR OBSERVATIONS MUST INCLUDE: BMPS THAT NEED TO BE MAINTAINED, LOCATION(S) OF BMPS THAT FAILED TO OPERATE AS DESIGNED OR PROVED INADEQUATE FOR A PARTICULAR LOCATION, AND LOCATION(S) WHERE ADDITIONAL BMPS ARE NEEDED THAT DID NOT EXIST AT THE TIME OF THE INSPECTION. FOLLOW-UP TO CORRECT DEFICIENCIES OR ENHANCE CONTROLS MUST ALSO BE INDICATED IN THE LOG AND DATED, INCLUDING WHAT ACTION WAS TAKEN AND WHEN.
3. ANY SOIL TRACKED ONTO ADJACENT PUBLIC STREETS BY CONSTRUCTION TRAFFIC SHALL BE CLEARED AND SWEPT ON A DAILY BASIS.
4. ANY AND ALL MAINTENANCE, REPLACEMENT AND REPAIR OF EROSION CONTROL MEASURES TO MEET REGULATION REQUIREMENTS OR FIELD CONDITIONS FOR THE PROJECT SHALL BE CONSIDERED INCIDENTAL TO THE CONTRACT COST.
5. THE CONTRACTOR SHALL MAKE ALLOWANCE FOR CLEANING, OR REPLACEMENT OF STABILIZED OUTLETS, CHANNELS AND OTHER CONVEYANCES THAT BECOME CONTAMINATED WITH SEDIMENT DURING CONSTRUCTION.
6. SPARE EROSION CONTROL MATERIALS INCLUDING 200 FEET OF SILT FENCE, 20 HAYBALES AND 10 CUBIC YARDS OF STONE SHALL BE STORED ON SITE FOR EMERGENCY USE DURING DEVELOPMENT OF THE PROJECT.
7. THE CONSTRUCTION COMPANY, GENERAL CONTRACTOR AND OWNER SHALL MEET WITH THE TOWN ENGINEER TO REVIEW THE PROPOSED WORK PRIOR TO THE COMMENCEMENT OF ANY GRADING, CLEARING OR CONSTRUCTION ACTIVITIES.

CONSTRUCTION SEQUENCE

1. CONSTRUCTION SHALL COMMENCE WITH INSTALLATION OF PERIMETER EROSION CONTROLS AND STABILIZED CONSTRUCTION ENTRANCES AND ROADS.
2. STABILIZED OUTLETS SHALL BE CONSTRUCTED IN ALL AREAS OF FUTURE CONCENTRATED STORMWATER FLOW PRIOR TO THE DIRECTION OF FLOW TO THESE AREAS.
3. FINAL CONSTRUCTION SCHEDULE & SEQUENCE WILL BE REVIEWED WITH OWNER PRIOR TO MOBILIZATION.

EROSION AND SEDIMENTATION CONTROL MEASURES

1. PRIOR TO THE BEGINNING OF CONSTRUCTION, THE TEMPORARY CONSTRUCTION EXIT AND PERIMETER EROSION CONTROLS SHALL BE INSTALLED AS SHOWN ON THE PLANS OR AS DIRECTED BY THE OWNERS REPRESENTATIVE. IT IS THE INTENT THAT EROSION CONTROL MEASURES BE INSTALLED DOWN GRADIENT OF ALL DISTURBED AREAS OF THE SITE. SOIL EROSION & SEDIMENTATION CONTROLS SHALL BE INSPECTED IMMEDIATELY AFTER EACH RAINFALL AND AT LEAST DAILY DURING PROLONGED RAINFALL. ANY REQUIRED REPAIRS WILL BE MADE IMMEDIATELY. SEDIMENT DEPOSITS SHALL BE PERIODICALLY REMOVED FROM THE UPSTREAM SIDE OF THE SILT BARRIERS. THIS SEDIMENT WILL BE SPREAD AND STABILIZED IN AREAS OF THE SITE NOT SUBJECT TO EROSION. SILT FENCE SHALL BE REPLACED AS NECESSARY TO PROVIDE PROPER FILTERING ACTION. IF THERE ARE SIGNS OF UNDERCUTTING AT THE CENTER OR THE EDGES, OR IMPOUNDING OF LARGE VOLUMES OF WATER BEHIND THEM, THEY WILL BE REPLACED WITH A TEMPORARY CRUSHED STONE CHECK DAM.
2. ALL CATCH BASINS, NEW OR EXISTING, THAT MAY RECEIVE RUNOFF FROM DISTURBED AREAS MUST BE PROTECTED DURING CONSTRUCTION.
3. REMOVAL OF SOD, TREES, BUSHES AND OTHER VEGETATION AND SOIL DISTURBANCE WILL BE KEPT TO A MINIMUM WHILE ALLOWING PROPER SITE DEVELOPMENT.
4. GRUBBINGS AND ANY UNUSABLE TOPSOIL SHALL BE STRIPPED AND REMOVED FROM THE PROJECT SITE AND DISPOSED OF IN AN APPROVED MANNER.
5. ANY SUITABLE TOPSOIL WILL BE STRIPPED AND STOCKPILED FOR REUSE IN FINAL GRADING. TOPSOIL WILL BE STOCKPILED IN A MANNER SUCH THAT NATURAL DRAINAGE IS NOT OBSTRUCTED AND NO OFF-SITE SEDIMENT DAMAGE WILL RESULT. IF A STOCKPILE IS NECESSARY, THE SIDE SLOPES OF THE TOPSOIL STOCKPILE WILL NOT EXCEED 2:1. TOPSOIL STOCKPILES WILL BE TEMPORARILY SEEDED WITH RYE, ANNUAL OR PERENNIAL RYE GRASS WITHIN 7 DAYS OF FORMATION, OR TEMPORARILY MULCHED IF SEEDING CANNOT BE DONE WITHIN THE RECOMMENDED SEEDING DATES.
6. TEMPORARY DIVERSION BERMS AND DRAINAGE SWALES SHALL BE CONSTRUCTED AS NECESSARY.
7. TEMPORARY STABILIZATION SHALL BE CONDUCTED WITHIN 7 DAYS OF INITIAL DISTURBANCE OF SOILS, PRIOR TO ANY RAIN EVENT, AND PRIOR TO ANY WORK SHUT DOWN LASTING MORE THAN ONE DAY. TEMPORARY STABILIZATION INCLUDES SEED, MULCH, OR OTHER NON-ERODABLE COVER.
8. TEMPORARY SEEDING: SEE SPECIFICATIONS.

EROSION & SEDIMENTATION CONTROL NOTES (A9)

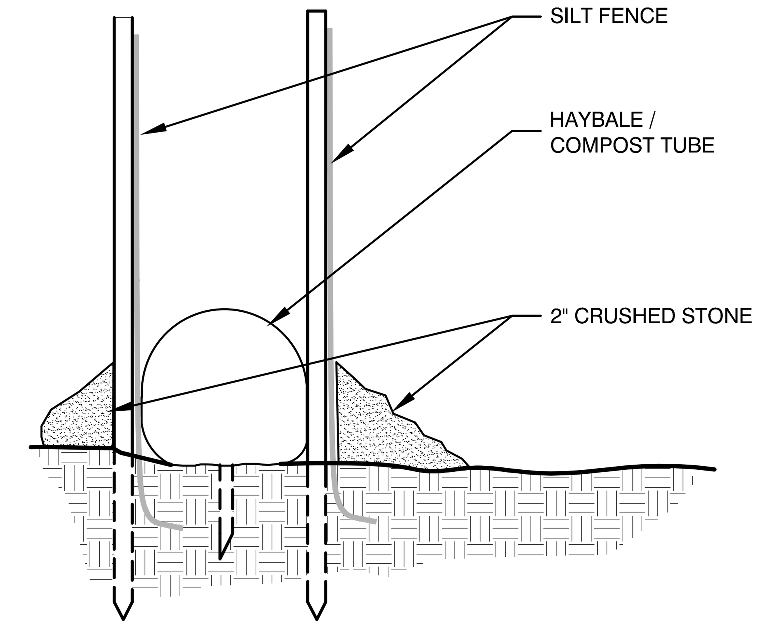

SILT FENCE / HAYBALE BARRIER (L6)

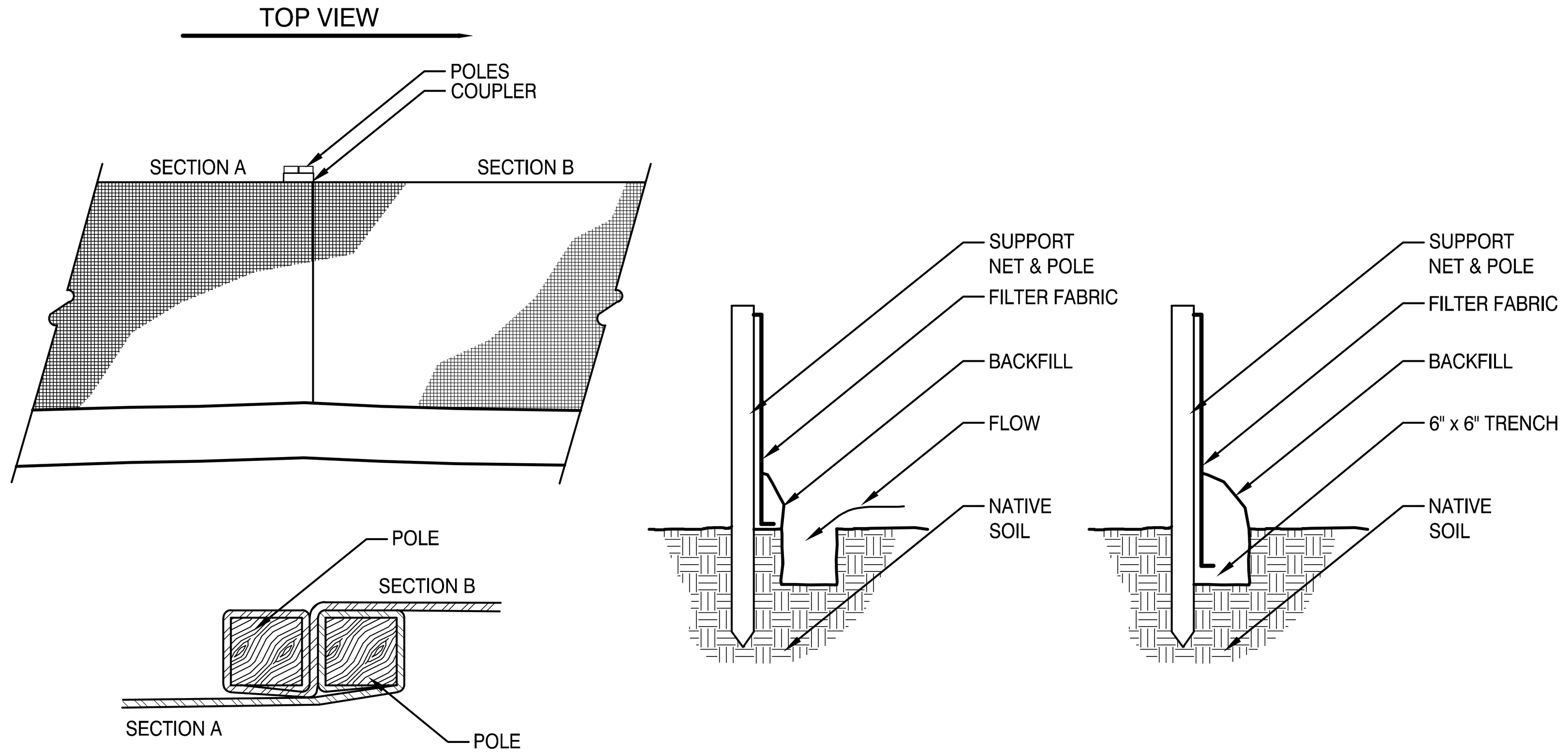

SILT FENCE (L1)

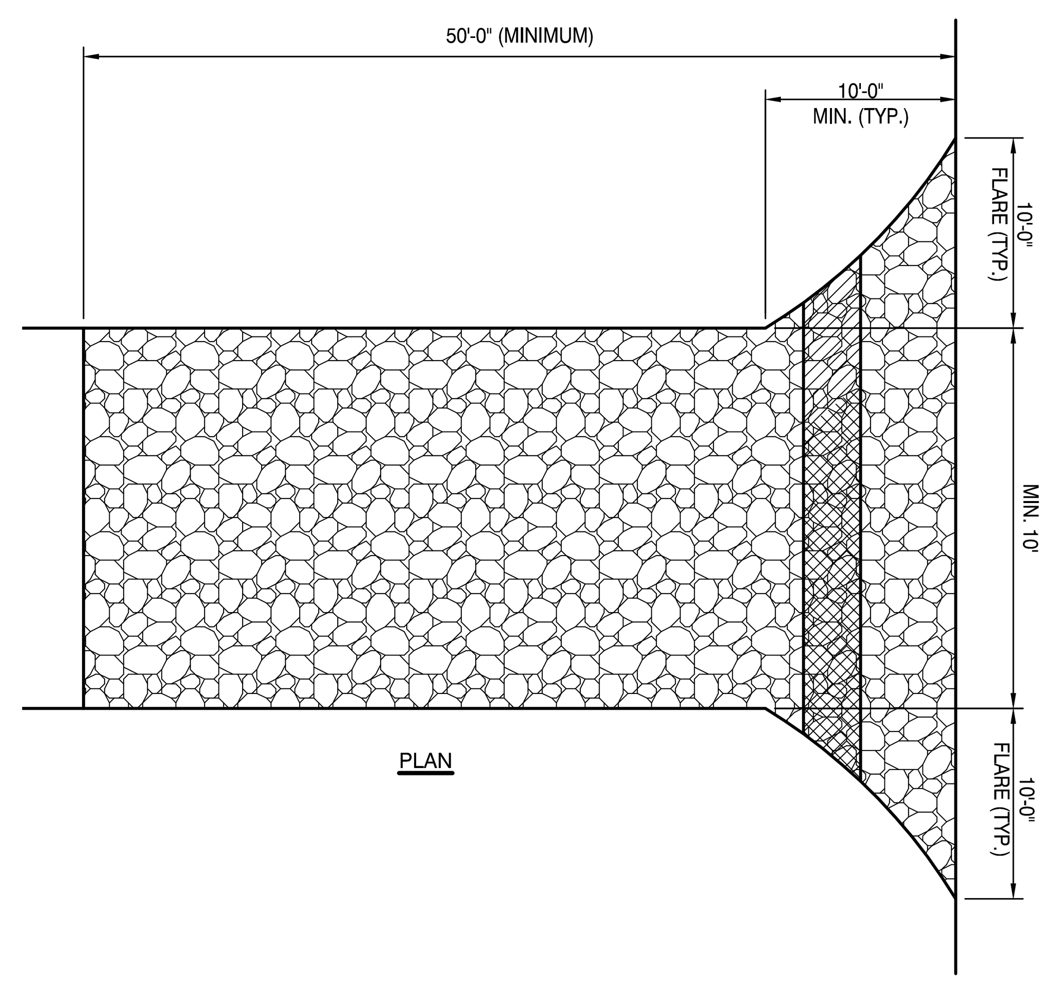

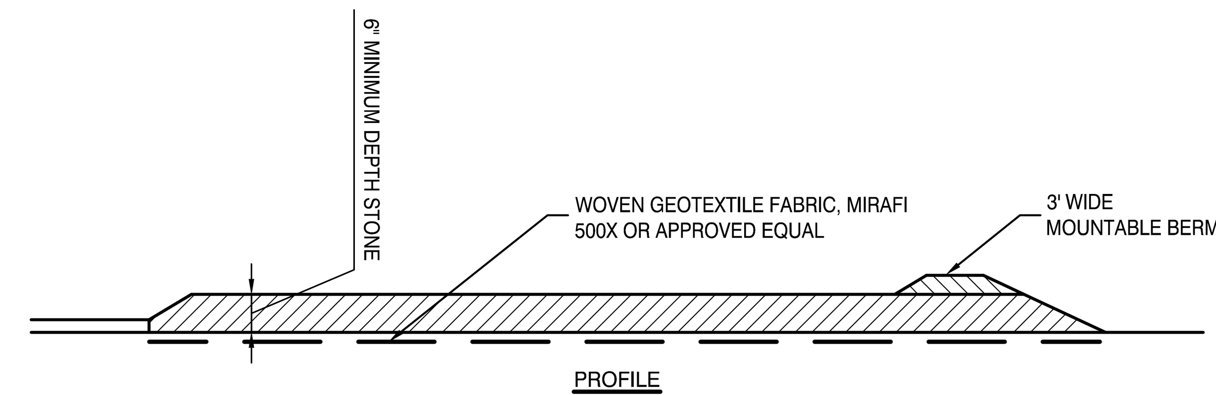

NOTES:

1. THE PURPOSE IS TO REMOVE MUD FROM TIRES OF CONSTRUCTION VEHICLES.
2. WHEN STONE BECOMES CLOGGED AND INEFFECTIVE, TOPDRESS WITH 3" OF NEW STONE OR REPLACE ENTIRE PAD.
3. MINIMUM SIZE OF STONE SHALL BE 3" CRUSHED STONE. MINIMUM THICKNESS SHALL BE 6".
4. IF TIRE WASHING IS REQUIRED, WASH WATER SHALL DRAIN INTO AN APPROVED SEDIMENT TRAPPING DEVICE.
5. REMOVE ENTIRE SYSTEM AT COMPLETION OF THE PROJECT, AND RESTORE TO ORIGINAL CONDITION.

CONSTRUCTION ACCESS ROAD (F1)

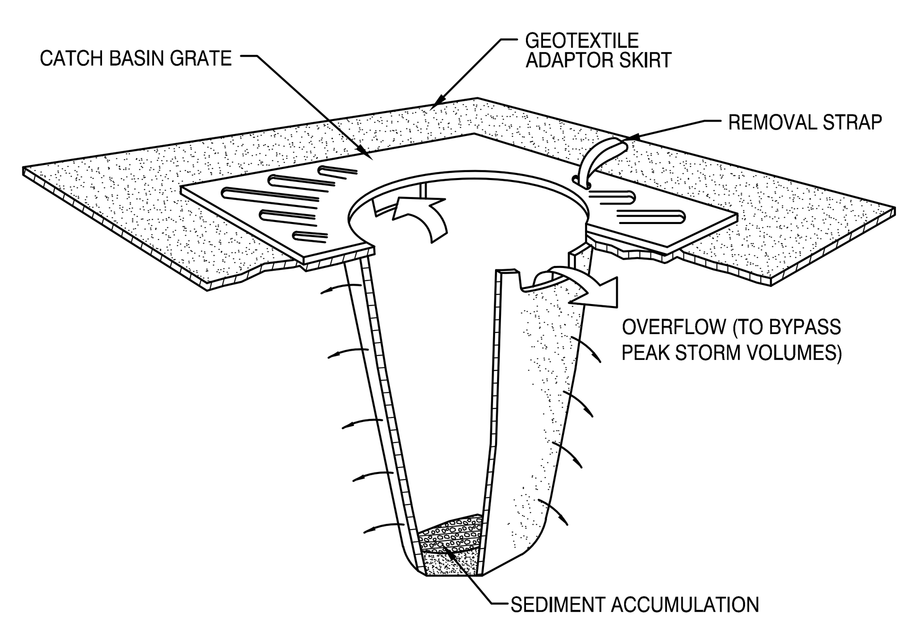

NOTES:

1. CATCH BASIN PROTECTION TO BE "SILTSACK" (BY ACF ENVIRONMENTAL) OR "STREAM GUARD" (BY FOSS ENVIRONMENTAL SERVICES).
2. INSERT TO BE EMPTIED IN AN APPROVED MANNER WHEN IT IS 1/2 FULL OF SEDIMENT.
3. INSPECT INSERT AFTER ALL RAINFALL EVENTS, REPAIR AND MAINTAIN AS REQUIRED.

SILT SACK (A5)

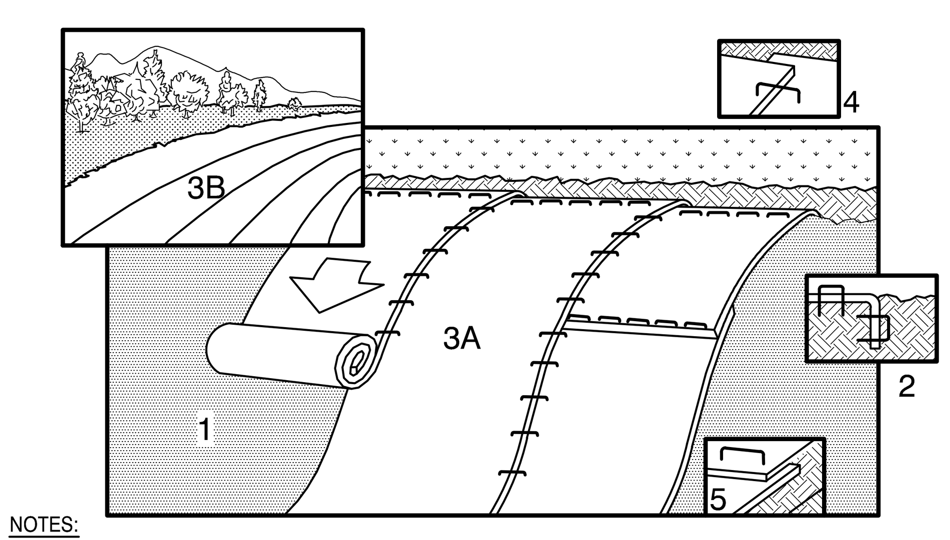

NOTES:

1. PREPARE SOIL BEFORE INSTALLING BLANKETS, INCLUDING APPLICATION OF LIME, FERTILIZER, AND SEED. NOTE: WHEN USING CELL-O-SEED DO NOT SEED PREPARED AREA. CELL-O-SEED MUST BE INSTALLED WITH PAPER SIDE DOWN.
2. BEGIN AT THE TOP OF THE SLOPE BY ANCHORING THE BLANKET IN 6" DEEP X 6" WIDE TRENCH. BACKFILL AND COMPACT THE TRENCH AFTER STAPLING.
3. ROLL THE BLANKETS (A) DOWN OR (B) HORIZONTALLY ACROSS THE SLOPE.
4. THE EDGES OF PARALLEL BLANKETS MUST BE STAPLED WITH APPROXIMATELY 2" OVERLAP. REFER TO GENERAL STAPLE PATTERN GUIDE FOR CORRECT STAPLE PATTERN RECOMMENDATIONS FOR SLOPE INSTALLATIONS.
5. WHEN BLANKETS MUST BE SPLICED DOWN THE SLOPE, PLACE BLANKETS END OVER END (SHINGLE STYLE) WITH APPROXIMATELY 4" OVERLAP. STAPLE THROUGH OVERLAPPED AREA, APPROXIMATELY 12" APART.
6. EROSION CONTROL BLANKET SHALL BE 100% BIODEGRADABLE DOUBLE MESH NET BLANKET WITH 100% COCONUT FIBER MATRIX AND ORGANIC JUTE NETTING. CONTROL BLANKET FOR USE IN CHANNELS SHALL BE NORTH AMERICAN GREEN® BIONET® C125-BN™. EAST COAST EROSION BLANKETS ECC-2B OR APPROVED EQUAL.

EROSION CONTROL BLANKET (A1)

REV	DESCRIPTION	DATE
2	REISSUED FOR PERMITTING	03-28-19
1	REISSUED FOR PERMITTING	03-22-19
0	ISSUED FOR PERMITTING	02-20-19

REISSUED FOR PERMITTING
03-28-19

CURRENT ISSUE STATUS:

STATE OF CONNECTICUT · 31994 · LICENSED · PROFESSIONAL ENGINEER · 3/28/19

SMRT Architects and Engineers
200 Brickstone Square, Suite 303
Andover, Massachusetts 01810
1.877.700.7678
www.smrtinc.com
ARCHITECTURE | ENGINEERING | PLANNING | INTERIORS | ENERGY
SMRT

UNIVERSITY OF SAINT JOSEPH
ATHLETIC FIELD RENOVATIONS

1678 ASYLUM AVE., W. HARTFORD, CT 06117

SITE EROSION & SEDIMENT CONTROL NOTES & DETAILS

SHEET TITLE:

SCALE: AS NOTED

PROJECT MANAGER:	RFW	PROJECT NO:	19014
A/E OF RECORD:	MAF		
JOB CAPTAIN:	–	CE501	
DRAWN BY:	JSM		
SMRT FILE:	CE501-19014.dwg	SHEET No.	

© COPYRIGHT 2016 SMRT INC.

NOT FOR CONSTRUCTION

24x36

LIMIT OF WETLAND (TYP.)

LIMIT OF WETLAND (TYP.)

LIMIT OF WETLAND (TYP.)

LIMIT OF WETLAND (TYP.)

LIMIT OF WETLAND (TYP.)

LIMIT OF WETLAND (TYP.)

EDGE OF WOODS

EDGE OF WOODS

EDGE OF BRUS

SYNTHETIC TURF ANCHOR CURB (E1 / CL501)

ATHLETIC FIELD LIGHT POLES; REFER TO DETAIL A13/CL501 TYP. OF 4

29.3'

1.0'

17.0'

360.0'

17.0'

9.0'

1.0'

17.0'

G8 / CL501 RELOCATED SCOREBOARD (FIELD LOCATE W/ OWNER)

A8 / CL501 BALL SAFETY NETTING (12.0' HEIGHT)

BALL SAFETY NETTING (12.0' HEIGHT) A8 / CL501

SYNTHETIC FIELD SURFACING; SEE DETAILS A1, E1 & H1/CL501

225.0'

ELECTRICAL RECEPTACLE; SEE DRAWING ES100 (TYP. OF 4)

ELECTRICAL RECEPTACLE; SEE DRAWING ES100 (TYP. OF 4)

LIMIT OF 150'-0" REGULATED AREA

E1 / CL501 SYNTHETIC TURF ANCHOR CURB

SYNTHETIC TURF ANCHOR CURB E1 / CL501

105.5'

17.0'

28.4'

60.0' TYP.

N: 10157499.73
E: 12064946.44
(INSIDE OF CONTAINMENT CURB)

42.6'

12.0'

ASPHALT PAVEMENT (EMERGENCY ACCESS DRIVE) E8 / CL501

E1 / CL501 SYNTHETIC TURF ANCHOR CURB

7.0'

E8 / CL501 ASPHALT PAVEMENT

REPLACE SECTION OF ASPHALT BERM (TYP. BOTH SIDES OF NEW PAVEMENT)

ASPHALT PAVEMENT E8 / CL501

3.0'

LIMIT OF WETLAND (TYP.)

LIMIT OF 150'-0" REGULATED AREA

REV	DESCRIPTION	DATE
2	REISSUED FOR PERMITTING	03-28-19
1	REISSUED FOR PERMITTING	03-22-19
0	ISSUED FOR PERMITTING	02-20-19

REISSUED FOR PERMITTING
03-28-19

CURRENT ISSUE STATUS:

TRUE NORTH:

STATE OF CONNECTICUT
MASSACHUSETTS
JOHN
31984
LICENSED
PROFESSIONAL ENGINEER
3/28/19

SMRT Architects and Engineers
200 Brickstone Square, Suite 303
Andover, Massachusetts 01810
1.877.700.7678
www.smrtinc.com

ARCHITECTURE | ENGINEERING | PLANNING | INTERIORS | ENERGY

SMRT

UNIVERSITY OF SAINT JOSEPH ATHLETIC FIELD RENOVATIONS

1678 ASYLUM AVE., W. HARTFORD, CT 06117

SITE LAYOUT & MATERIALS PLAN

SHEET TITLE:

0' 15' 30' 60' 90'

SCALE: 1"=30'-0"

PROJECT MANAGER:	RFW	PROJECT NO:	19014
A/E OF RECORD:	MAF		
JOB CAPTAIN:	–		
DRAWN BY:	JSM		
SMRT FILE:	CL101-19014.dwg	SHEET No.	CL101

© COPYRIGHT 2019 SMRT INC

NOT FOR CONSTRUCTION

24x36

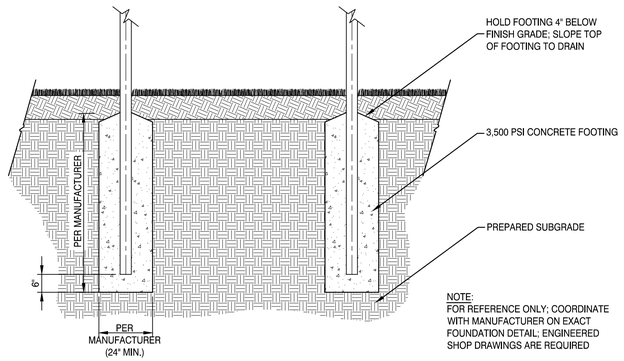

NOTE:
FOR REFERENCE ONLY; COORDINATE WITH MANUFACTURER ON EXACT FOUNDATION DETAIL; ENGINEERED SHOP DRAWINGS ARE REQUIRED

SCOREBOARD FOUNDATION G8

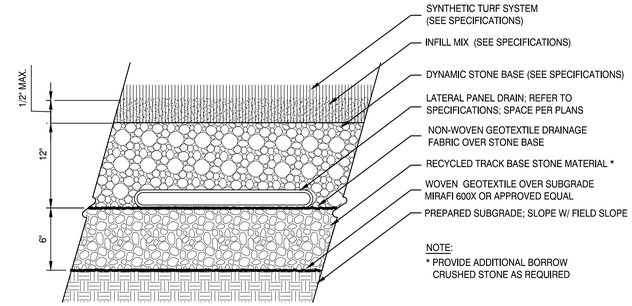

NOTE:
* PROVIDE ADDITIONAL BORROW CRUSHED STONE AS REQUIRED

SYNTHETIC TURF FIELD SECTION ENLARGEMENT H1

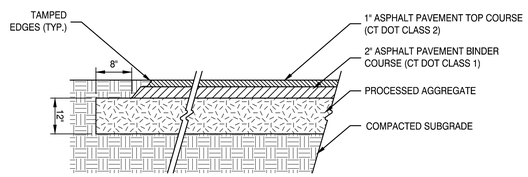

ASPHALT PAVEMENT E8

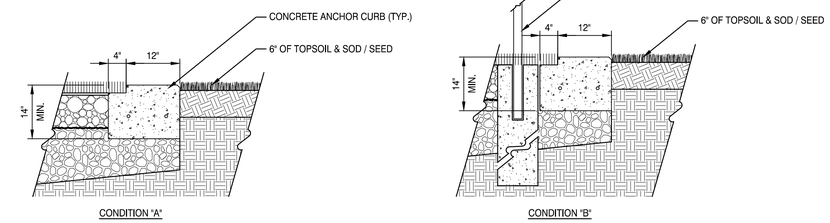

SYNTHETIC TURF ANCHOR CURB E1

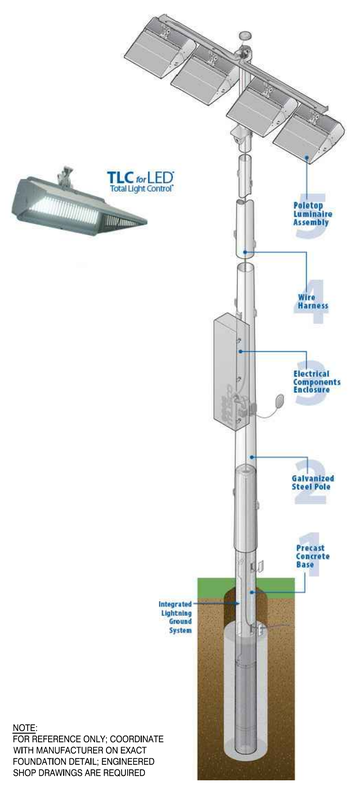

NOTE:
FOR REFERENCE ONLY; COORDINATE WITH MANUFACTURER ON EXACT FOUNDATION DETAIL; ENGINEERED SHOP DRAWINGS ARE REQUIRED

ATHLETIC FIELD LIGHT POLE A13

NOTES:
1. SPACE NET POLES PER MANUFUFACTER'S RECOMMENDATION.
2. NET, PULLEY & HOIST SYSTEM SHALL BE MODEL TFBSS, AS MANUFACTURED BY SPORTSFIELD SPECIALTIES INC., OR APPROVED EQUAL.
3. SPORTS NET TO BE 1 3/4" SYNTHETIC REINFORCED BLACK NYLON MESH. NET TO INCLUDE 5/16" PERIMETER CORD AND BOTTOM TENSION CABLE.
4. ALL FASTENERS TO BE STAINLESS STEEL.
5. ALL PULLEYS, HARDWARE, & ATTACHMENTS TO BE ZINC PLATED OR EQUIVALENT.

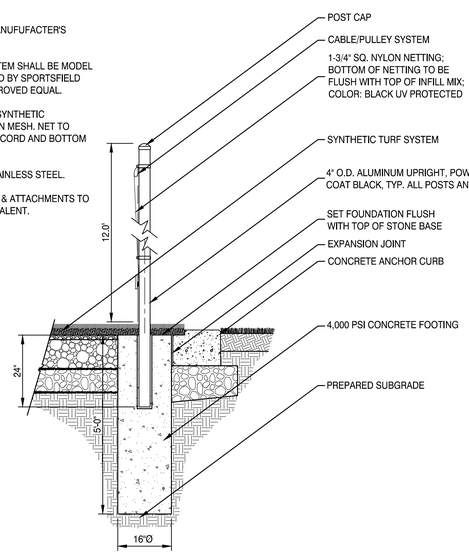

BALL SAFETY NETTING A8

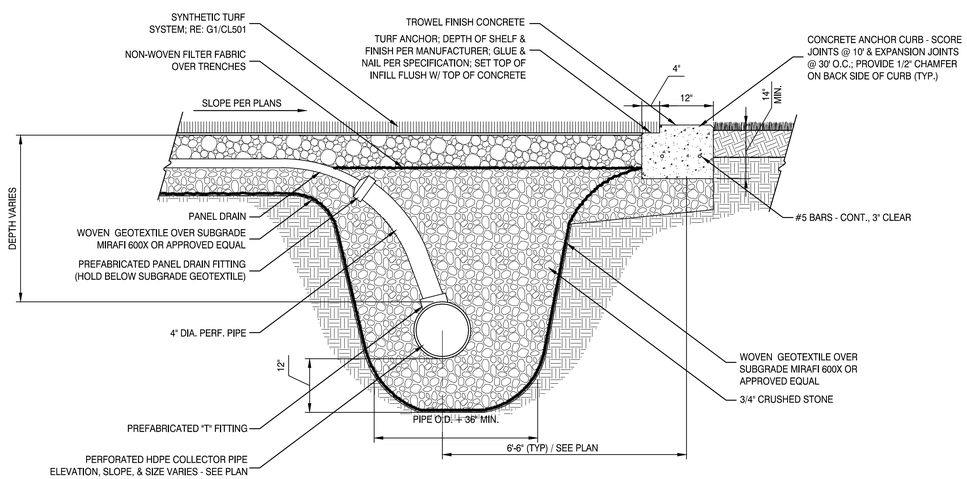

SYNTHETIC TURF FIELD SECTION A1

REV	DESCRIPTION	DATE
2	REISSUED FOR PERMITTING	03-28-19
1	REISSUED FOR PERMITTING	03-22-19
0	ISSUED FOR PERMITTING	02-20-19

REISSUED FOR PERMITTING
03-28-19
CURRENT ISSUE STATUS:

STATE OF CONNECTICUT · CHRISTOPHER A. FLYNN · LICENSED PROFESSIONAL ENGINEER · 31508 · 3/28/19

SMRT Architects and Engineers
200 Brickstone Square, Suite 303
Andover, Massachusetts 01810
1.877.700.7678
www.smrtinc.com
ARCHITECTURE | ENGINEERING | PLANNING | INTERIORS | ENERGY
SMRT

UNIVERSITY OF SAINT JOSEPH
ATHLETIC FIELD RENOVATIONS

1678 ASYLUM AVE., W. HARTFORD, CT 06117

SITE DETAILS

SHEET TITLE:

SCALE: AS NOTED

PROJECT MANAGER:	RFW	PROJECT NO:	19014
A/E OF RECORD:	MAF		
JOB CAPTAIN:	--	CL501	
DRAWN BY:	JSM		
SMRT FILE:	CL501-19014.dwg	SHEET No.	

© COPYRIGHT 2019 SMRT INC.

NOT FOR CONSTRUCTION

24x36

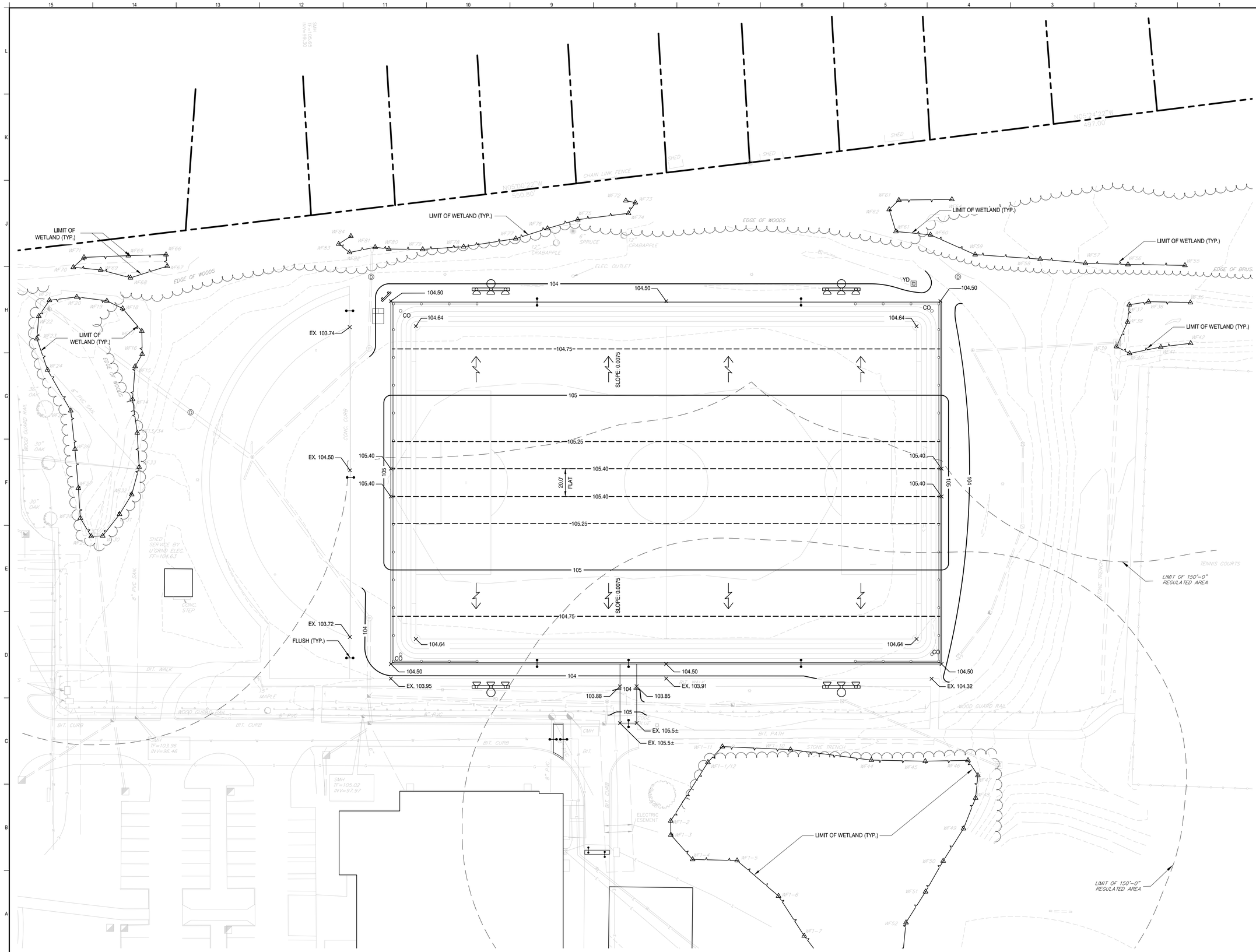

REV	DESCRIPTION	DATE
2	REISSUED FOR PERMITTING	03-28-19
1	REISSUED FOR PERMITTING	03-22-19
0	ISSUED FOR PERMITTING	02-20-19

REISSUED FOR PERMITTING
03-28-19

CURRENT ISSUE STATUS:

TRUE NORTH:

STATE OF CONNECTICUT
MASSASOIT, FLYNN
LICENSED PROFESSIONAL ENGINEER
3/28/19

SMRT Architects and Engineers
200 Brickstone Square, Suite 303
Andover, Massachusetts 01810
1.877.700.7678
www.smrtinc.com
ARCHITECTURE | ENGINEERING | PLANNING | INTERIORS | ENERGY

UNIVERSITY OF SAINT JOSEPH ATHLETIC FIELD RENOVATIONS

1678 ASYLUM AVE., W. HARTFORD, CT 06117

SITE GRADING PLAN

SHEET TITLE:

0' 15' 30' 60' 90'

SCALE: 1"=30'-0"

PROJECT MANAGER:	RFW	PROJECT NO:	19014
A/E OF RECORD:	MAF		
JOB CAPTAIN:	--		
DRAWN BY:	JSM		
SMRT FILE:	CG101-19014.dwg	SHEET No.	CG101

© COPYRIGHT 2019 SMRT INC.

NOT FOR CONSTRUCTION

24x36

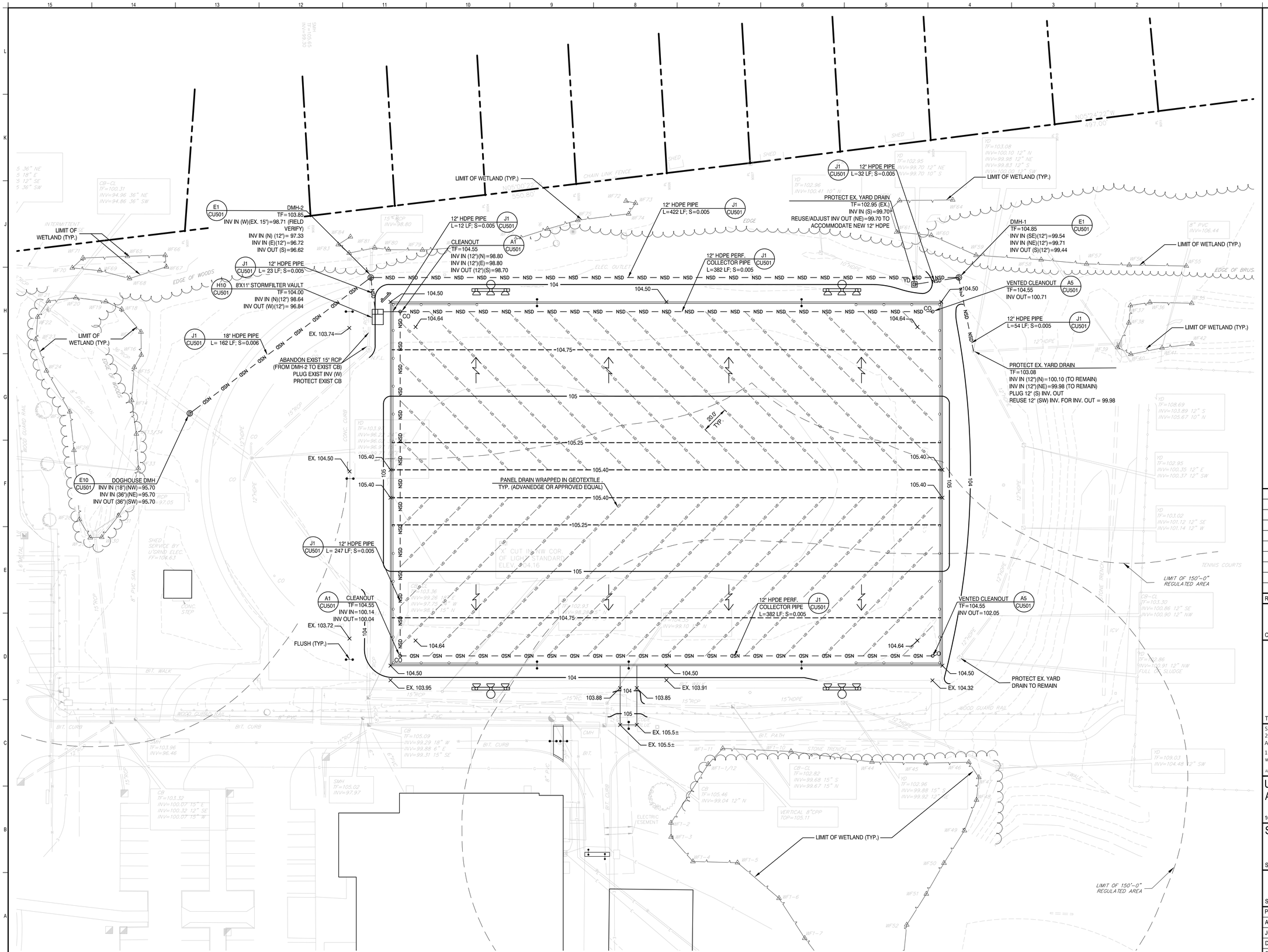

REV	DESCRIPTION	DATE
2	REISSUED FOR PERMITTING	03-28-19
1	REISSUED FOR PERMITTING	03-22-19
0	ISSUED FOR PERMITTING	02-20-19

REISSUED FOR PERMITTING
03-28-19

CURRENT ISSUE STATUS:

TRUE NORTH:

STATE OF CONNECTICUT
MICHAEL A. FLYNN
LICENSED PROFESSIONAL ENGINEER
3/28/19

SMRT Architects and Engineers
200 Brickstone Square, Suite 303
Andover, Massachusetts 01810
1.877.700.7678
www.smrtinc.com
ARCHITECTURE | ENGINEERING | PLANNING | INTERIORS | ENERGY

UNIVERSITY OF SAINT JOSEPH ATHLETIC FIELD RENOVATIONS

1678 ASYLUM AVE., W. HARTFORD, CT 06117

SITE DRAINAGE & UTILITY PLAN

SHEET TITLE:

0' 15' 30' 60' 90'

SCALE: 1"=30'-0"

PROJECT MANAGER:	RFW	PROJECT NO:	19014
A/E OF RECORD:	MAF		
JOB CAPTAIN:	–		
DRAWN BY:	MAF		
SMRT FILE:	CU101-19014.dwg	SHEET No.	CU101

©COPYRIGHT 2019 SMRT INC.

NOT FOR CONSTRUCTION

24x36

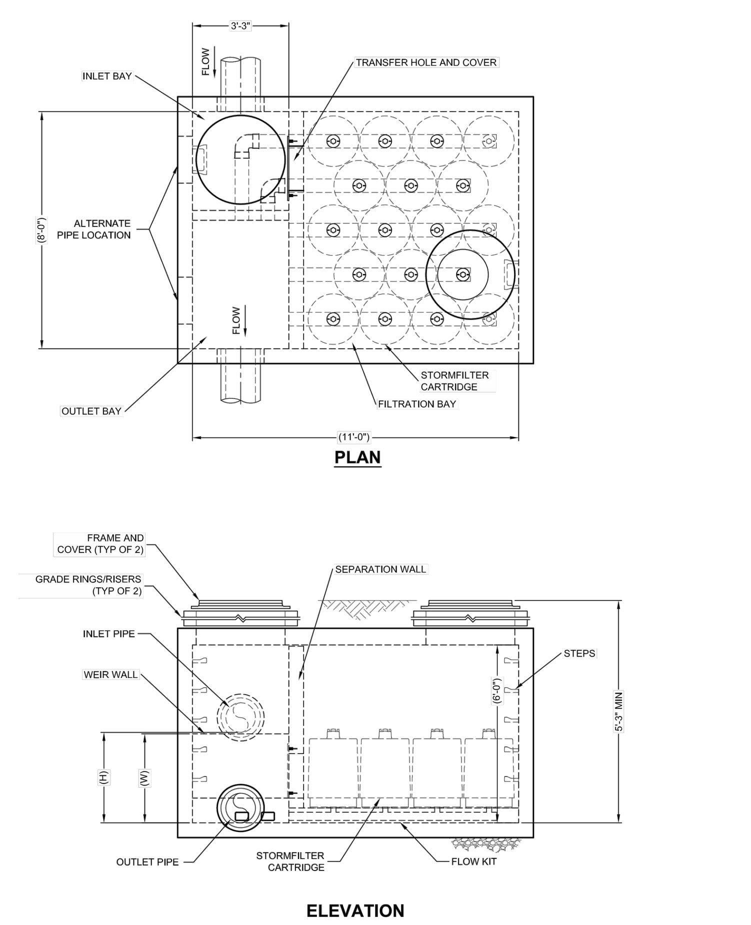

STORMFILTER DESIGN NOTES

- THE 8' x 11' PEAK DIVERSION STORMFILTER TREATMENT CAPACITY VARIES BY CARTRIDGE COUNT AND LOCALLY APPROVED SURFACE AREA SPECIFIC FLOW RATE. PEAK CONVEYANCE CAPACITY TO BE DETERMINED BY ENGINEER OF RECORD.
- THE PEAK DIVERSION STORMFILTER IS AVAILABLE IN A LEFT INLET (AS SHOWN) OR RIGHT INLET CONFIGURATION.
- ALL PARTS AND INTERNAL ASSEMBLY PROVIDED BY CONTECH UNLESS OTHERWISE NOTED.

CARTRIDGE SELECTION

CARTRIDGE HEIGHT	27"			18"			LOW DROP		
RECOMMENDED HYDRAULIC DROP (H)	3.05'			2.3'			1.8'		
HEIGHT OF WEIR (W)	3.00'			2.25'			1.75'		
SPECIFIC FLOW RATE (gpm/sf)	2 gpm/sf	1.67* gpm/sf	1 gpm/sf	2 gpm/sf	1.67* gpm/sf	1 gpm/sf	2 gpm/sf	1.67* gpm/sf	1 gpm/sf
CARTRIDGE FLOW RATE (gpm)	22.5	18.79	11.25	15	12.53	7.5	10	8.35	5

* 1.67 gpm/sf SPECIFIC FLOW RATE IS APPROVED WITH PHOSPHOSORB ® (PSORB) MEDIA ONLY

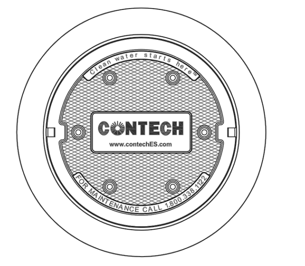

FRAME AND COVER
(DIAMETER VARIES)
N.T.S.

SITE SPECIFIC DATA REQUIREMENTS

STRUCTURE ID	*		
WATER QUALITY FLOW RATE (cfs)	*		
PEAK FLOW RATE (cfs)	*		
RETURN PERIOD OF PEAK FLOW (yrs)	*		
CARTRIDGE HEIGHT (27", 18", LOW DROP(LD))	*		
NUMBER OF CARTRIDGES REQUIRED	*		
CARTRIDGE FLOW RATE	*		
MEDIA TYPE (PERLITE, ZPG, PSORB)	*		
PIPE DATA:	I.E.	MATERIAL	DIAMETER
INLET PIPE	*	*	*
OUTLET PIPE	*	*	*
UPSTREAM RIM ELEVATION	*		
DOWNSTREAM RIM ELEVATION	*		
ANTI-FLOTATION BALLAST	WIDTH	HEIGHT	
	*	*	
NOTES/SPECIAL REQUIREMENTS:			
* PER ENGINEER OF RECORD			

PERFORMANCE SPECIFICATION
FILTER CARTRIDGES SHALL BE MEDIA-FILLED, PASSIVE, SIPHON ACTUATED, RADIAL FLOW, AND SELF CLEANING. **RADIAL MEDIA DEPTH SHALL BE 7-INCHES**. FILTER MEDIA CONTACT TIME SHALL BE AT LEAST **38 SECONDS**.
SPECIFIC FLOW RATE SHALL BE **2 GPM/SF (MAXIMUM)**. SPECIFIC FLOW RATE IS THE MEASURE OF THE FLOW (GPM) DIVIDED BY THE MEDIA SURFACE CONTACT AREA (SF). MEDIA VOLUMETRIC FLOW RATE SHALL BE **6 GPM/CF OF MEDIA (MAXIMUM).**

GENERAL NOTES
1. CONTECH TO PROVIDE ALL MATERIALS UNLESS NOTED OTHERWISE.
2. DIMENSIONS MARKED WITH ( ) ARE REFERENCE DIMENSIONS. ACTUAL DIMENSIONS MAY VARY.
3. FOR FABRICATION DRAWINGS WITH DETAILED STRUCTURE DIMENSIONS AND WEIGHTS, PLEASE CONTACT YOUR CONTECH REPRESENTATIVE. www.contechES.com
4. STORMFILTER WATER QUALITY STRUCTURE SHALL BE IN ACCORDANCE WITH ALL DESIGN DATA AND INFORMATION CONTAINED IN THIS DRAWING. CONTRACTOR TO CONFIRM STRUCTURE MEETS REQUIREMENTS OF PROJECT.
5. STRUCTURE SHALL MEET AASHTO HS20 LOAD RATING, ASSUMING EARTH COVER OF 0' - 5' AND GROUNDWATER ELEVATION AT, OR BELOW, THE OUTLET PIPE INVERT ELEVATION. ENGINEER OF RECORD TO CONFIRM ACTUAL GROUNDWATER ELEVATION. CASTINGS SHALL MEET AASHTO M306 AND BE CAST WITH THE CONTECH LOGO.

INSTALLATION NOTES
A. ANY SUB-BASE, BACKFILL DEPTH, AND/OR ANTI-FLOTATION PROVISIONS ARE SITE-SPECIFIC DESIGN CONSIDERATIONS AND SHALL BE SPECIFIED BY ENGINEER OF RECORD.
B. CONTRACTOR TO PROVIDE EQUIPMENT WITH SUFFICIENT LIFTING AND REACH CAPACITY TO LIFT AND SET THE STORMFILTER STRUCTURE (LIFTING CLUTCHES PROVIDED).
C. CONTRACTOR TO INSTALL JOINT SEALANT BETWEEN ALL SECTIONS AND ASSEMBLE STRUCTURE.
D. CONTRACTOR TO PROVIDE, INSTALL, AND GROUT PIPES. MATCH OUTLET PIPE INVERT WITH OUTLET BAY FLOOR.
E. CONTRACTOR TO TAKE APPROPRIATE MEASURES TO PROTECT CARTRIDGES FROM CONSTRUCTION-RELATED EROSION RUNOFF.
F. CONTRACTOR TO REMOVE THE TRANSFER HOLE COVER WHEN THE SYSTEM IS BROUGHT ONLINE.

STORM FILTER VAULT (H10)

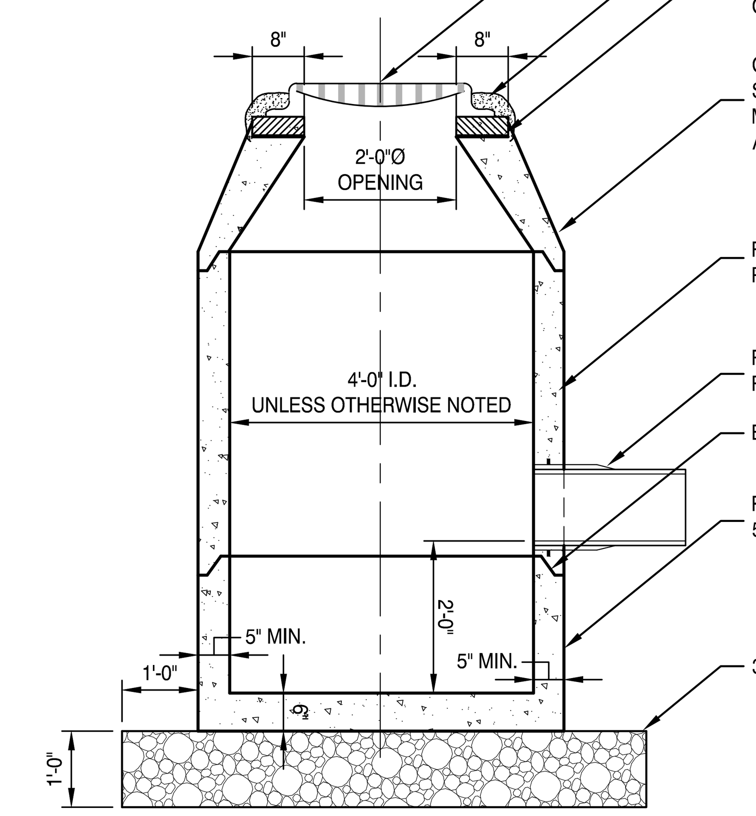

NOTE:
1. STANDARD GRATES SHALL BE NENAH R-3210-L OR APPROVED EQUAL. DITCH GRATES SHALL BE NEENAH R-4342 OR APPROVED EQUAL.

CATCH BASIN (H5)

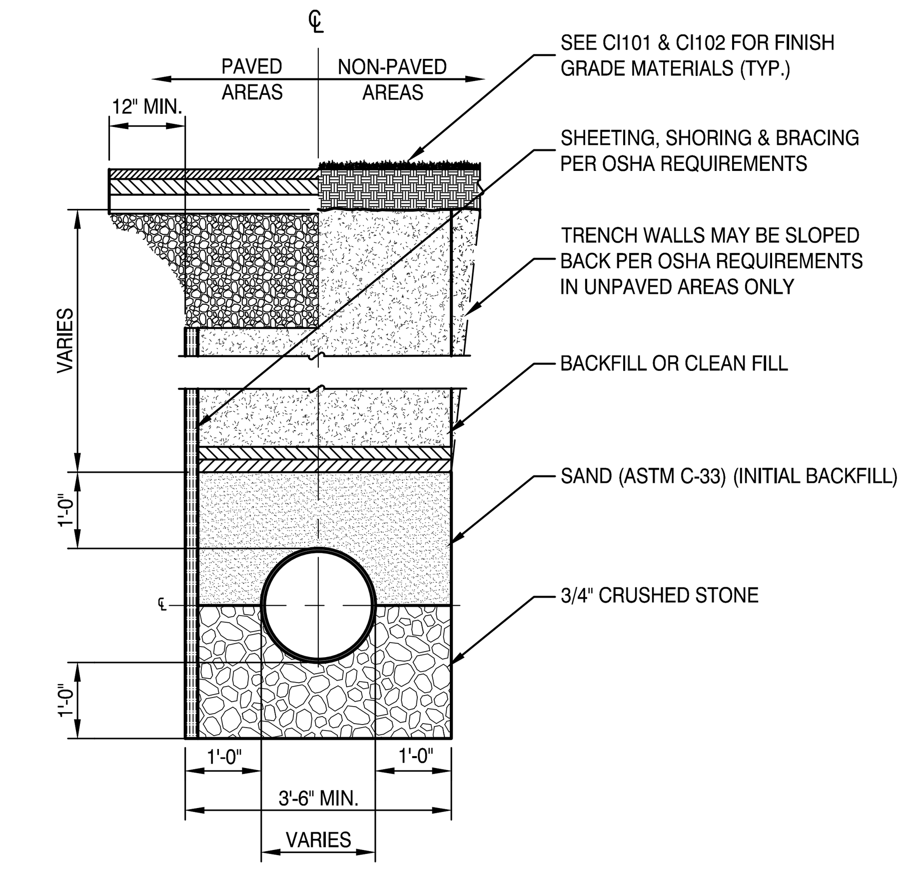

DRAINAGE PIPE TRENCH (J1)

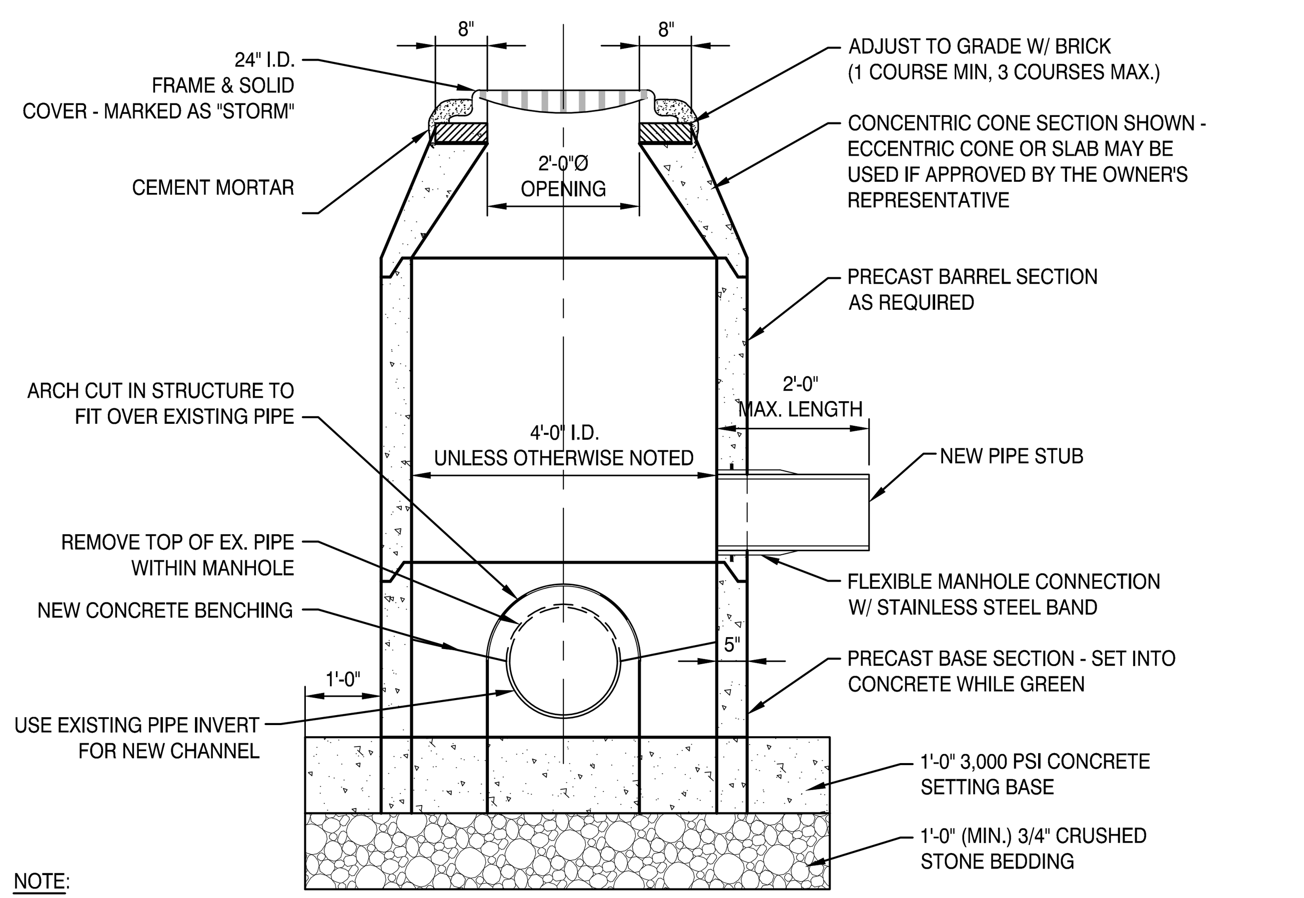

NOTE:
EXPOSE EXISTING PIPE AND CONSTRUCT BEDDING AND CONCRETE SETTING BASE. INSTALL STRUCTURE OVER EXISTING PIPE, CUT TOP OF PIPE AND CONSTRUCT BENCHING TO SLOPE TOWARDS NEW CHANNEL AT 1:10. SEAL PIPE PENETRATIONS WITH CEMENTITIOUS MORTAR.

DOG-HOUSE MANHOLE (E10)

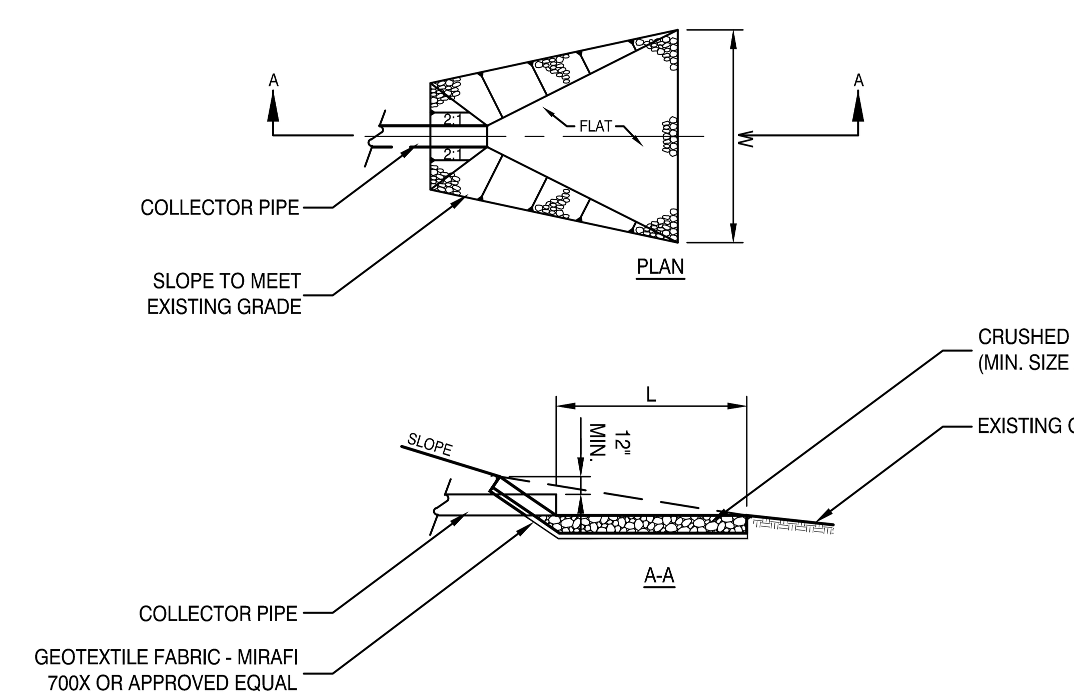

STONE SPILL-OFF / FLARED END SECTION (E5)

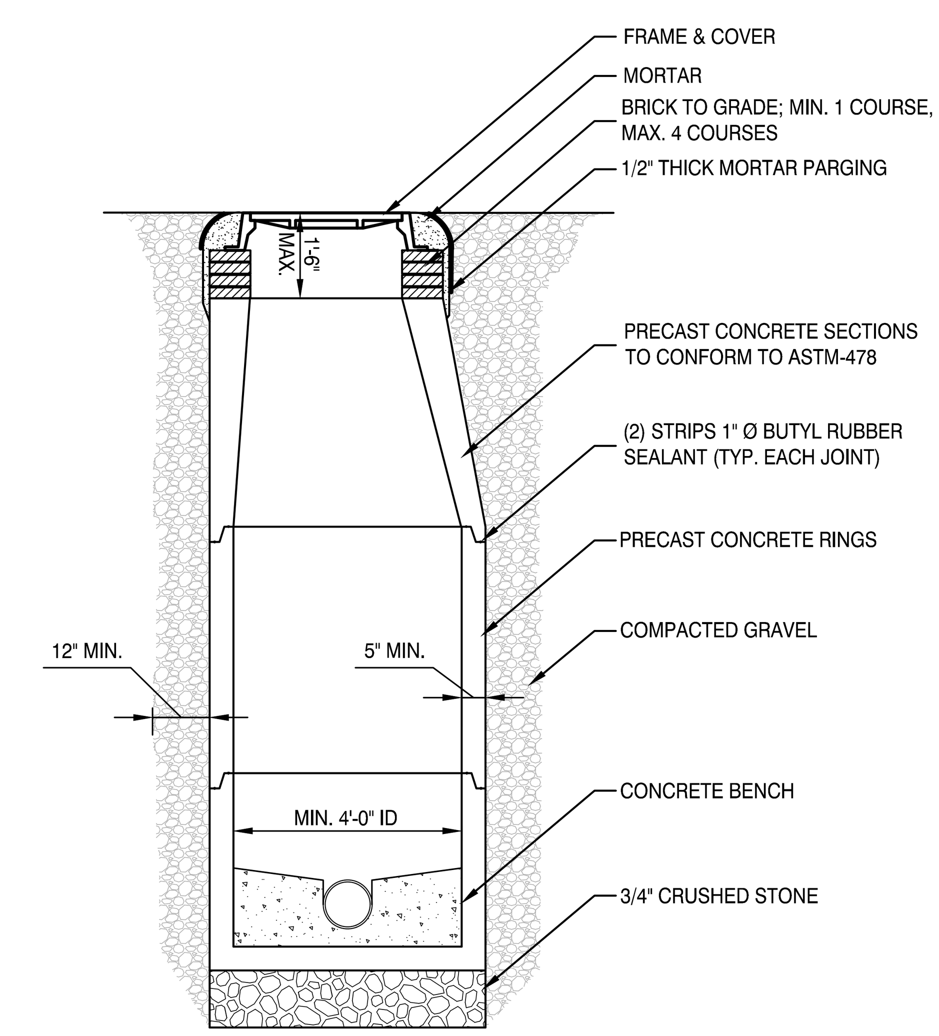

DRAIN MANHOLE (E1)

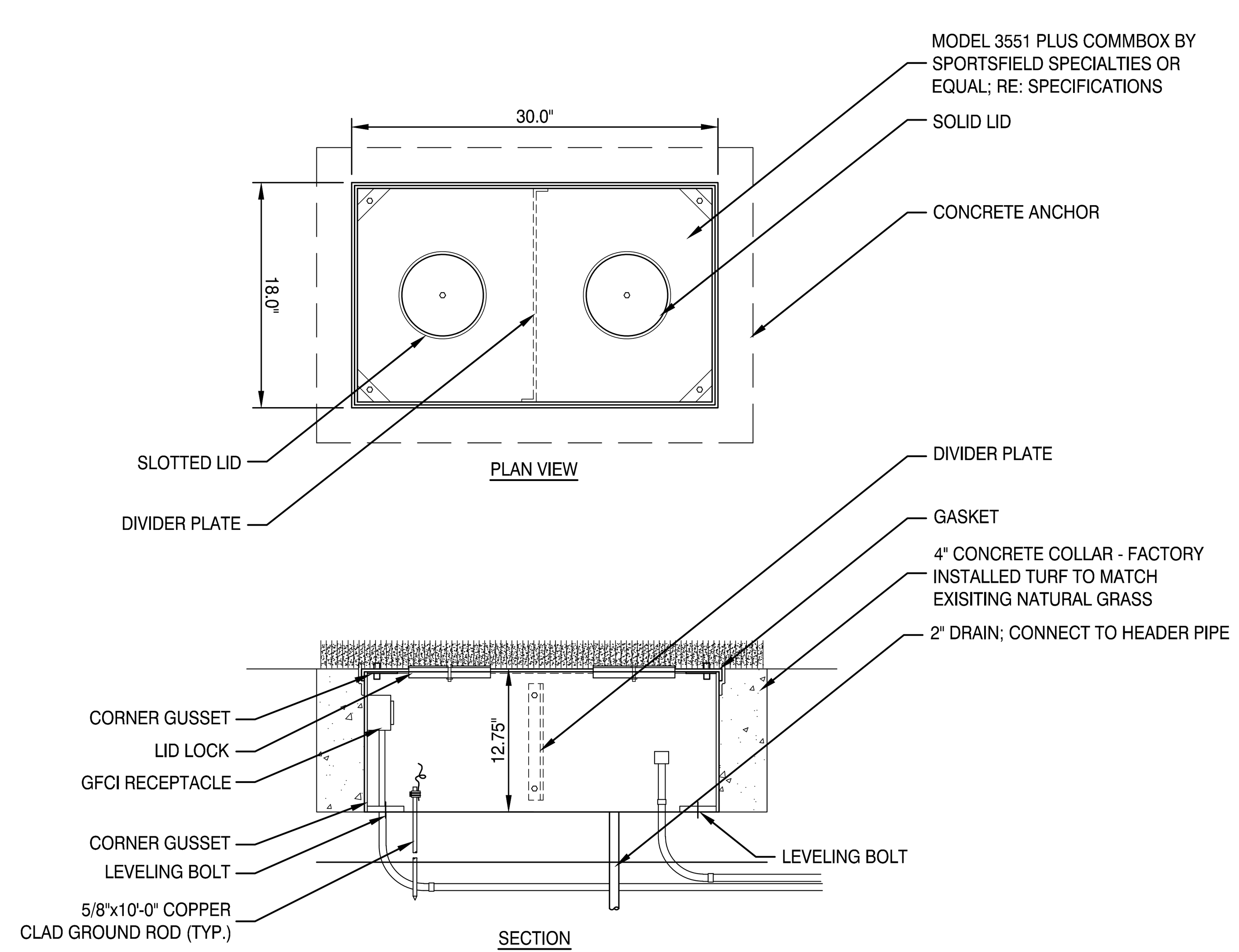

ELECTRICAL COMM-BOX (A10)

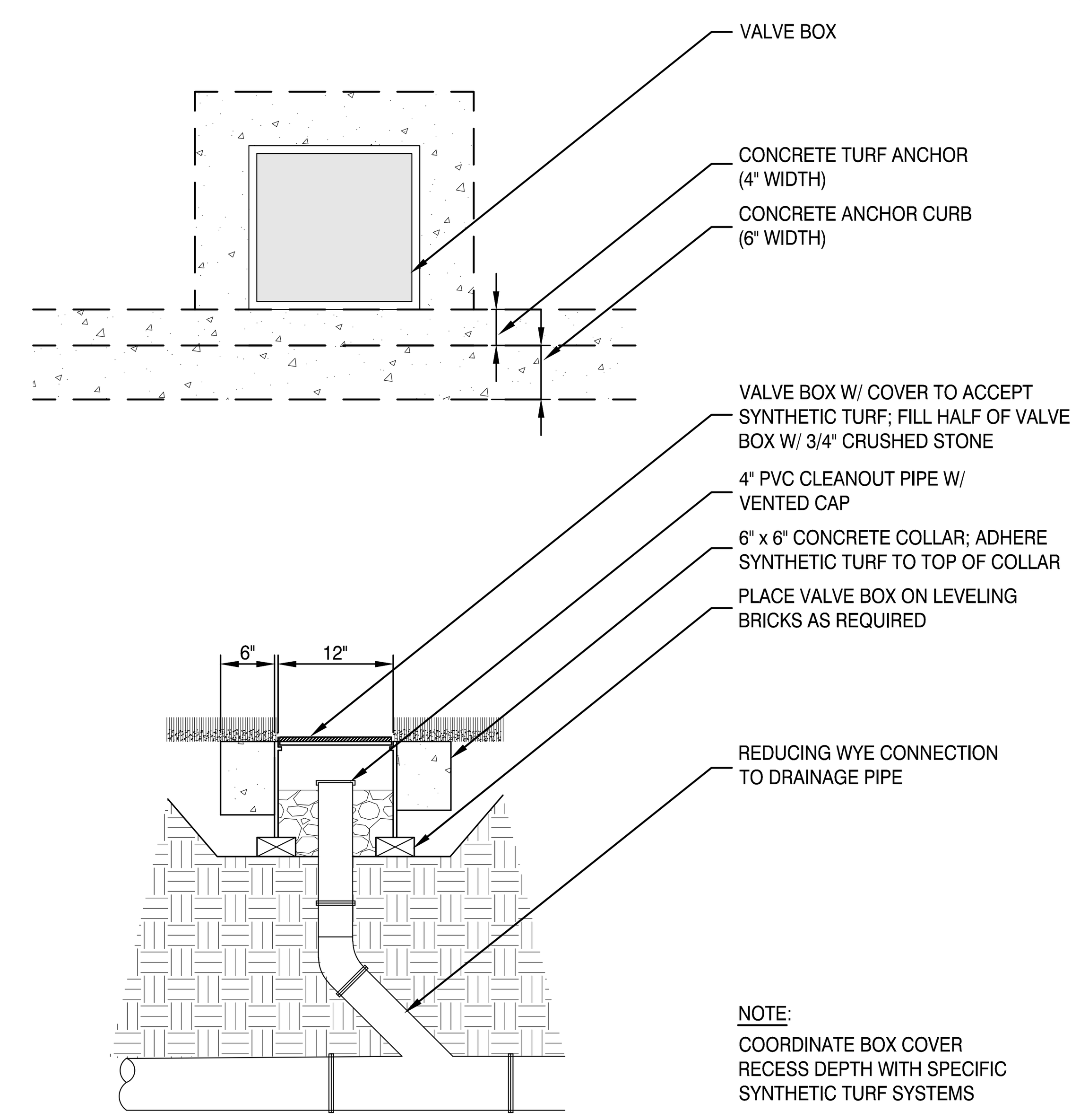

NOTE:
COORDINATE BOX COVER RECESS DEPTH WITH SPECIFIC SYNTHETIC TURF SYSTEMS

VENTED CLEANOUT IN SYNTHETIC TURF (A5)

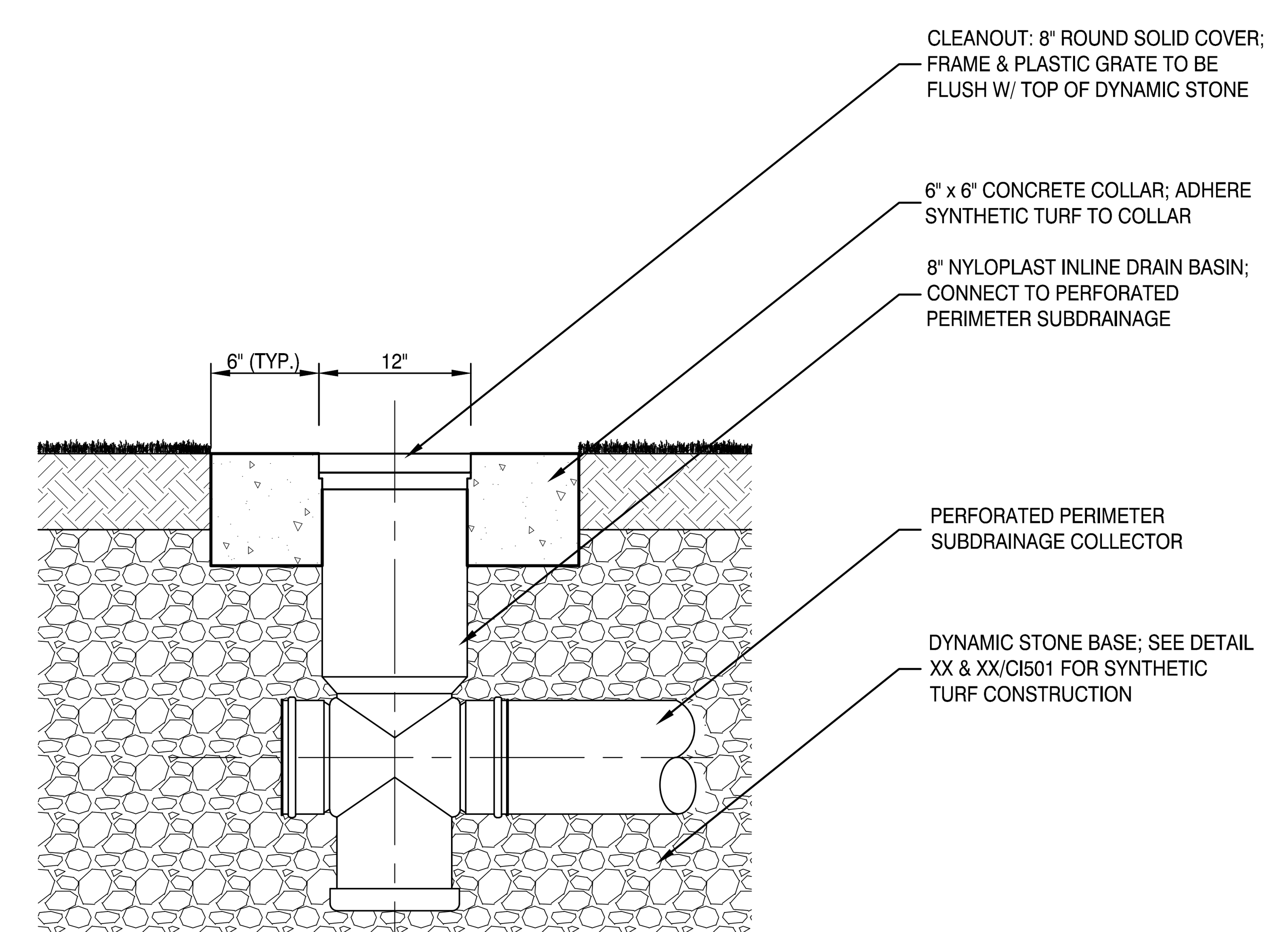

CLEANOUT (A1)

REV	DESCRIPTION	DATE
2	REISSUED FOR PERMITTING	03-28-19
1	REISSUED FOR PERMITTING	03-22-19
0	ISSUED FOR PERMITTING	02-20-19

REISSUED FOR PERMITTING
03-28-19
CURRENT ISSUE STATUS:

SMRT Architects and Engineers
200 Brickstone Square, Suite 303
Andover, Massachusetts 01810
1.877.700.7678
www.smrtinc.com
ARCHITECTURE | ENGINEERING | PLANNING | INTERIORS | ENERGY
SMRT

UNIVERSITY OF SAINT JOSEPH
ATHLETIC FIELD RENOVATIONS

1678 ASYLUM AVE., W. HARTFORD, CT 06117

SITE UTILITY DETAILS

SHEET TITLE:

PROJECT MANAGER:	RFW	PROJECT NO:	19014
A/E OF RECORD:	MAF		
JOB CAPTAIN:	–		
DRAWN BY:	MAF	CU501	
SMRT FILE:	CU501-19014.DWG	SHEET No.	

© COPYRIGHT 2016 SMRT INC.

NOT FOR CONSTRUCTION

24x36

LEGEND

J	JUNCTION BOX		DUPLEX RECEPTACLE
	CONDUIT TURNING UP		DUPLEX GFCI RECEPTACLE
	CONDUIT TURNING DOWN		
	EY CONDUIT SEAL	G	UNDERGROUND GROUNDING CONDUCTOR
CP	CONTROL PANEL		GROUND ROD
PPA-XX	BRANCH CIRCUIT NUMBER INDICATES PANEL NAME		
	HOME RUN TO INDICATED PANEL		
	PANELBOARD, NORMAL POWER		
ECB	ENCLOSED CIRCUIT BREAKER		
T	TRANSFORMER		

LINE TYPES

	EXISTING	E	NEW POWER AND COMMUNICATION DUCTS AS NOTED
	NEW	E	NEW DUCTS FOR FUTURE FIELD LIGHTING AS NOTED
	DEMOLITION	E	EXISTING UNDERGROUND CIRCUIT

ABBREVIATIONS

A,AMP	AMPERE	LA	LIGHTNING ARRESTER
AFF	ABOVE FINISHED FLOOR	LTG	LIGHTING
AFG	ABOVE FINISHED GRADE	MC	METAL CLAD
AHJ	AUTHORITY HAVING JURISDICTION	MCB	MAIN CIRCUIT BREAKER
AIC	AMPERE INTERRUPTING CAPACITY	MFR	MANUFACTURER
AWG	AMERICAN WIRE GAUGE	MI	MINERAL INSULATED
BFG	BELOW FINISHED GRADE	MLO	MAIN LUG ONLY
BOS	BOTTOM OF STEEL	MTD	MOUNTED
C	CONDUIT, CONDUCTOR	MV	MEDIUM VOLTAGE
CATV	CABLE TELEVISION	NC	NORMALLY CLOSED
CB	CIRCUIT BREAKER	NEC	NATIONAL ELECTRICAL CODE
CCTV	CLOSED CIRCUIT TELEVISION	NEG	NEGATIVE
CPT	CONTROL POWER TRANSFORMER	NEUT	NEUTRAL
CT	CURRENT TRANSFORMER	NIC	NOT IN CONTRACT
CU	COPPER	NO	NORMALLY OPEN
DACT	DIGITAL ALARM COMMUNICATOR TRANSMITTER	NTS	NOT TO SCALE
DB	DIRECT BURIED	PF	POWER FACTOR
DISC	DISCONNECT	PH	PHASE
DN	DOWN	PVC	POLYVINYL CHLORIDE
EMT	ELECTRICAL METALLIC TUBING	RGS	RIGID STEEL CONDUIT
EWC	ELECTRIC WATER COOLER	RSC	RIGID STEEL CONDUIT
FAA	FIRE ALARM ANNUNCIATOR	RTD	RESISTANCE TEMPERATURE DETECTOR
FACP	FIRE ALARM CONTROL PANEL	SN	SOLID NEUTRAL
FBO	FURNISHED BY OTHERS	STP	SHIELDED TWISTED PAIR
FU	FUSE	STT	SHIELDED TWISTED TRIPLET
FWE	FURNISHED WITH EQUIPMENT	SWBD	SWITCHBOARD
GEN	GENERATOR	SWGR	SWITCHGEAR
GFCI	GROUND FAULT CIRCUIT BREAKER	TOS	TOP OF STEEL
GND	GROUND	TP	TAMPER PROOF
HP	HORSEPOWER	TRANSF	TRANSFORMER
HTR	HEATER	TVSS	TRANSIENT VOLTAGE SURGE SUPPRESSER
IG	ISOLATED GROUND		
IMC	INTERMEDIATE METAL CONDUIT	UNO	UNLESS NOTED OTHERWISE
K	KILO	V	VOLT
KCMIL	THOUSAND CIRCULAR MILS	VA	VOLT-AMPERE
KV	KILOVOLT	VAR	VOLT-AMPERE REACTIVE
KVA	KILOVOLT-AMPERE	WM	WATT METER
KVAR	KILOVOLT-AMPERE REACTIVE	WP	WEATHER PROOF
KW	KILOWATT	XFMR	TRANSFORMER
KWH	KILOWATT-HOUR	XP	EXPLOSION PROOF

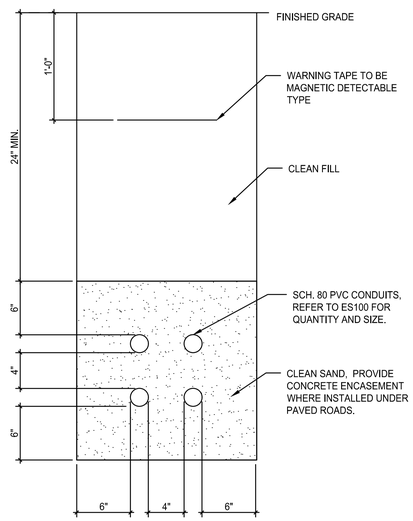

DUCTBANK DETAIL E11

NONE

DIRECTORY	kVA LOAD A	kVA LOAD B	kVA LOAD C	CKT NO.	BKR AMPS	A B C	BKR AMPS	CKT NO.	kVA LOAD A	kVA LOAD B	kVA LOAD C	DIRECTORY
FIELD LIGHTING POLE LP-1	4.5			1	50		50	2	-			FIELD LIGHTING POLE LP-2
		4.5		3				4		4.5		
			4.5	5				6			4.5	
FIELD LIGHTING POLE LP-3	4.5			7	50		50	8	4.5			FIELD LIGHTING POLE LP-4
		4.5		9				10		4.5		
			4.5	11				12			4.5	
RECEPTACLE @ PANEL FL-1	0.2			13	20		20	14	1.0			FIELD RECEPTACLE SR-1, 3
SPARE		-		15	20		20	16		0.5		SCOREBOARD
SPARE			-	17	20		20	18			1.0	FIELD RECEPTACLE SR-2, 4
SPACE	-			19				20	-			SPACE
SPACE		-		21				22		-		SPACE
SPACE			-	23				24			-	SPACE
SURGE SUPRESSOR	-			25	30		60	26	-			SPACE
		-		27				28		-		FUTURE PRESS BOX
			-	29				30			-	
SUB-TOTAL	9.2	9.0	9.0	NEUTRAL BUS GROUND BUS					10.0	9.5	10.0	SUB-TOTAL

VOLTAGE: 120/208V 3 PHASE 4 WIRE	250 AMP BUS	TOTAL kVA A	19.2	PANEL NO.	PANEL FL-1
MAIN CIRCUIT BREAKER	250 AMP	TOTAL kVA B	18.5		
MOUNTING: SURFACE		TOTAL kVA C	19.0	LOCATION	O'CONNELL CENTER EXTERIOR
SC RATING: 65,000 AIC		TOTAL kVA	56.7		

NOTES: PROVIDE WITH NEMA 3R ENCLOSURE
PROVIDE INTEGRAL SURGE SUPRESSOR

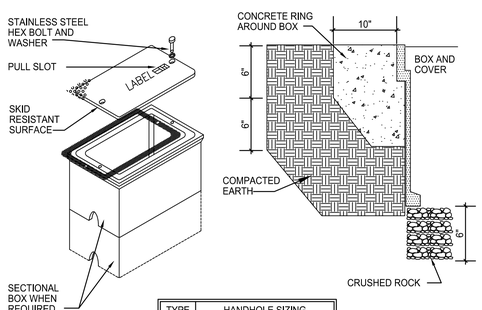

TYPE	HANDHOLE SIZING
5	12" X 12" X 24" DEEP
6	12" X 18" X 24" DEEP
7	12" X 24" X 24" DEEP
8	24" X 36" X 24" DEEP
9	30" X 48" X 24" DEEP

HANDHOLE REQUIREMENTS

1. HOUSING SHALL BE A POLYMER CONCRETE REINFORCED WITH A HEAVY WEAVE FIBERGLASS REINFORCING WITH COMPRESSIVE STRENGTH OF NO LESS THAN 10,000 PSI.
2. COVER AND BOX SHALL WITHSTAND A SERVICE LOAD OF NO LESS THAN 15,000 LBS OVER A 10" x 10" AREA.
3. PROVIDE STAINLESS STEEL BOLTS AND INSERTS.
4. PROVIDE WITH (2) 2 1/2" MOUSEHOLES.
5. PROVIDE LABEL "ELECTRICAL" FOR POWER HANDHOLES OR "TELEPHONE" FOR TELEPHONE HANDHOLES, OR AS INDICATED.

HANDHOLE DETAIL A11

NONE

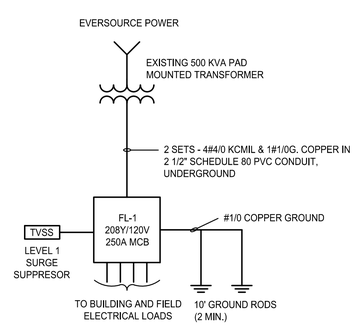

ONE-LINE DIAGRAM A5

NONE

GENERAL NOTES:

1. ALL WORK SHALL BE PERFORMED IN ACCORDANCE WITH NFPA-70, NATIONAL ELECTRICAL CODE (NEC).
2. ALL MOTOR SAFETY SWITCHES, DISCONNECTS AND MOTOR STARTERS ARE PROVIDED BY DIVISION 260000 UNLESS NOTED AS FURNISHED WITH EQUIPMENT (FWE).
3. AN EQUIPMENT GROUNDING CONDUCTOR SHALL BE INSTALLED WITH EVERY FEEDER AND BRANCH CIRCUIT.
4. CONVENIENCE RECEPTACLES SHALL BE COMMERCIAL GRADE GROUNDING TYPE NEMA 5-20R, SIDE WIRED, TAMPER RESISTANT. LEVITON, PASS AND SEYMOUR OR APPROVED EQUAL. COORDINATE COLOR WITH ARCHITECT.
5. PROVIDE WALL PLATES FOR ALL WIRING DEVICES GALVANIZED STEEL.
6. ALL WIRING SHALL BE 600V, COPPER WITH THHN/THWN INSULATION. SERVICE ENTRANCE CONDUCTORS SHALL HAVE XHHW INSULATION.
7. SITE POLES SHALL BE ROUND STRAIGHT ALUMINUM, SHALL BE FROM THE SAME MANUFACTURER AS THE LIGHT FIXTURE AND SHALL MATCH THE FINISH OF THE FIXTURE.
8. BASIS OF DESIGN FOR THE FIELD LIGHTING SYSTEM IS A MUSCO SYSTEM. ANY CHANGES TO DESIGN DUE TO ALTERNATE FIELD LIGHTING MANUFACTURER SHALL NOT REQUIRE ADDITIONAL COST TO THE OWNER. IF AN ALTERNATE FIELD LIGHTING MANUFACTURER IS SUBMITTED BY THE CONTRACTOR THEN THE CONTRACTOR SHALL SUBMIT FIELD LIGHTING CALCULATIONS, POLE DETAILS, FIXTURE INFORMATION, LAMP INFORMATION, CONTROL SYSTEM INFORMATION, POWER REQUIREMENTS AND SYSTEM VOLTAGE REQUIREMENTS, PRIOR TO WORK START, FOR APPROVAL BY OWNER AND ENGINEER.

GENERAL NOTE

1. ALL GENERAL NOTES, SYMBOL LISTS, AND DETAILS ARE TO BE CONSIDERED AS APPLICABLE TO ALL ELECTRICAL DRAWINGS FOR THIS PROJECT. SYMBOLS AND ABBREVIATIONS SHOWN ON THIS SHEET ARE FOR REFERENCE ONLY AND DO NOT INDICATE THEIR INCORPORATION IN THE DESIGN.

REV	DESCRIPTION	DATE
2	REISSUED FOR PERMITTING	03-28-19
1	REISSUED FOR PERMITTING	03-22-19
0	ISSUED FOR PERMITTING	02-20-19

REISSUED FOR PERMITTING
03-28-19

CURRENT ISSUE STATUS:

STATE OF CONNECTICUT
WILLIAM R. HEWITT
31997
LICENSED PROFESSIONAL ENGINEER
2/20/19

SMRT Architects and Engineers
200 Brickstone Square, Suite 303
Andover, Massachusetts 01810
1.877.700.7678
www.smrtinc.com
ARCHITECTURE | ENGINEERING | PLANNING | INTERIORS | ENERGY

UNIVERSITY OF SAINT JOSEPH ATHLETIC FIELD RENOVATIONS

1678 ASYLUM AVE., W. HARTFORD, CT 06117

ELECTRICAL LEGEND & NOTES

SHEET TITLE:

SCALE:

PROJECT MANAGER:	RFW	PROJECT NO:	19014
A/E OF RECORD:	WRH		
JOB CAPTAIN:	–		
DRAWN BY:	TMS		
SMRT FILE:	E-001-19014.dwg	SHEET No.	E-001

© COPYRIGHT 2019 SMRT INC.

NOT FOR CONSTRUCTION

24x36

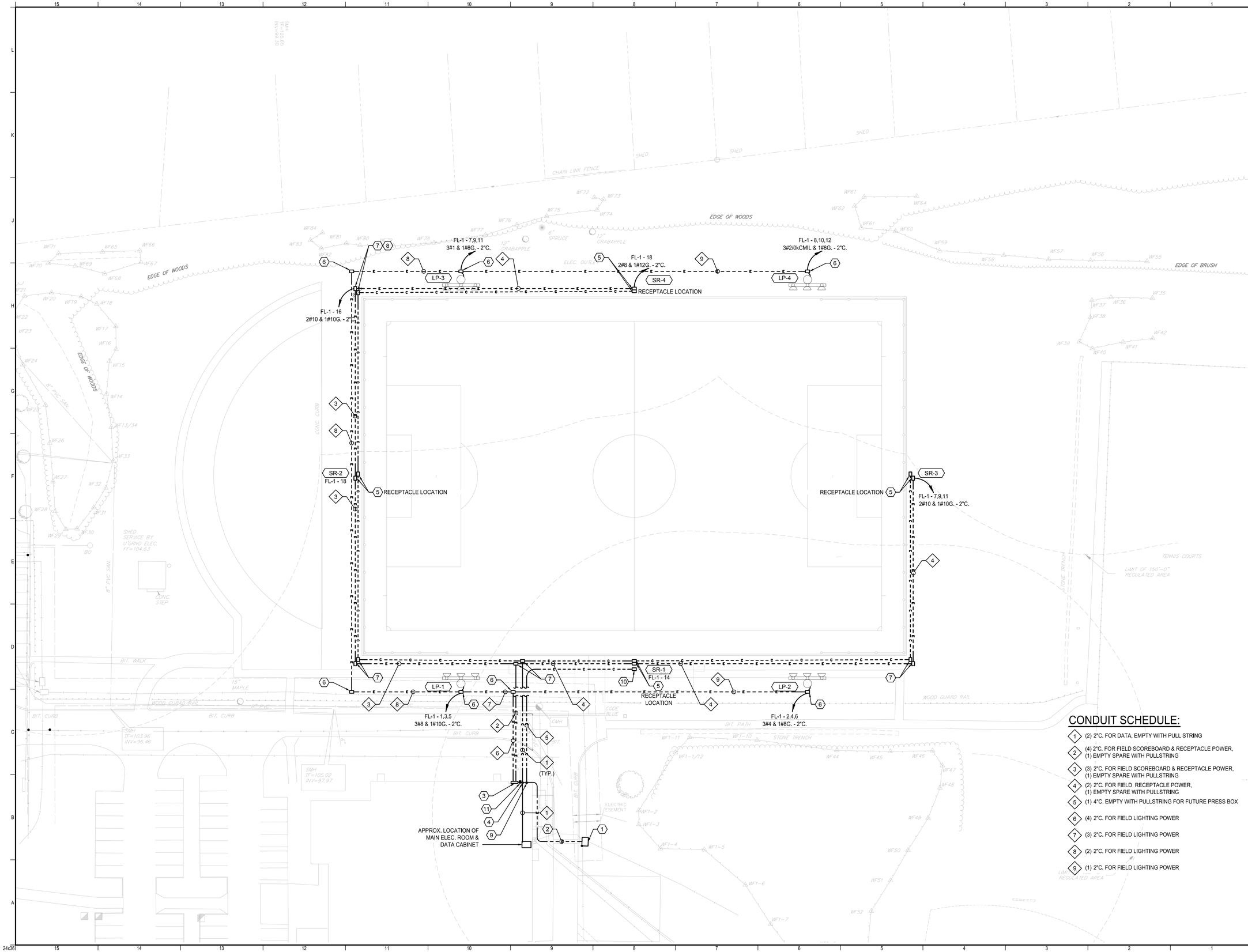

NOTES:

1. REFER TO DRAWING E-100 FOR LEGEND AND GENERAL NOTES. REFER TO C-001 FOR FIELD DESIGNATIONS.
2. ALL NEW CONDUIT AND ELECTRIC SERVICE TO AVOID EXISTING TREES AND VEGETATION. DO NOT IMPACT DRIP-LINE OF EXISTING TREES. COORDINATE CONDUIT ROUTING WITH OTHER EXISTING UNDERGROUND UTILITIES.

KEY NOTES:

1. EXISTING PAD MOUNTED 500 kVA TRANSFORMER.
2. PROVIDE NEW FEEDER TO NEW PANEL FL-1, ONE SET OF 2/250 KCMIL & 1#4G. - 3"C. PROVIDE A SPARE 3"C WITH PULLSTRING. REFER TO DUCT BANK DETAIL E11 ON E-001.
3. NEW PANEL FL-1, 250A MCB 208/120V, 30 POLE, IN NEMA 3R ENCLOSURE, SQUARE-D OR APPROVED EQUAL. REFER TO PANEL SCHEDULE ON E-001 FOR MORE INFORMATION.
4. PROVIDE TWO (2) 2" CONDUIT UNDERGROUND TO HANDHOLES. PROVIDE PULL STRINGS FOR ALL EMPTY CONDUITS.
5. PROVIDE 12"X24" HANDHOLE FOR TIMING/SCORING QUAZITE OR EQUAL. SEE DETAIL A11 ON SHEET E-001. LOCATE HANDHOLES WITHIN 24" OF CURB. PROVIDE GFCI DUPLEX RECEPTACLE AND ALL ACCESSORIES FOR POWER, CIRCUIT AS SHOWN.
6. PROVIDE 12"X24"" HANDHOLE FOR LIGHTING CIRCUITS, QUAZITE OR EQUAL. SEE DETAIL A11 ON SHEET E-001.
7. PROVIDE 12"X24" HANDHOLE FOR TIMING/SCORING QUAZITE OR EQUAL. SEE DETAIL A11 ON SHEET E-001. LOCATE HANDHOLES WITHIN 24" OF CURB.
8. PROVIDE POWER AND DATA CONNECTION TO SCOREBOARD, CIRCUIT AS SHOWN. COORDINATE EXACT LOCATION OF HANDHOLES WITH EQUIPMENT INSTALLER PRIOR TO ROUGH-IN.
9. PROVIDE 4" CONDUIT UNDERGROUND TO HANDHOLE FOR FUTURE PRESS BOX.
10. PROVIDE 12"X24"" HANDHOLE FOR FUTURE PRESS BOX, QUAZITE OR EQUAL. SEE DETAIL A11 ON SHEET E-001.
11. PROVIDE A GFCI DUPLEX RECEPTACLE WITH WEATHERPROOF "IN-USE" COVER AND CONNECT TO FL-1 - 13 WITH 2#12 & 1#12G. - 3/4"C. MOUNT RECEPTACLE ADJACENT TO THE PANEL.

CONDUIT SCHEDULE:

1. (2) 2"C. FOR DATA, EMPTY WITH PULL STRING
2. (4) 2"C. FOR FIELD SCOREBOARD & RECEPTACLE POWER, (1) EMPTY SPARE WITH PULLSTRING
3. (3) 2"C. FOR FIELD SCOREBOARD & RECEPTACLE POWER, (1) EMPTY SPARE WITH PULLSTRING
4. (2) 2"C. FOR FIELD RECEPTACLE POWER, (1) EMPTY SPARE WITH PULLSTRING
5. (1) 4"C. EMPTY WITH PULLSTRING FOR FUTURE PRESS BOX
6. (4) 2"C. FOR FIELD LIGHTING POWER
7. (3) 2"C. FOR FIELD LIGHTING POWER
8. (2) 2"C. FOR FIELD LIGHTING POWER
9. (1) 2"C. FOR FIELD LIGHTING POWER

REV	DESCRIPTION	DATE
2	REISSUED FOR PERMITTING	03-28-19
1	REISSUED FOR PERMITTING	03-22-19
0	ISSUED FOR PERMITTING	02-20-19

REISSUED FOR PERMITTING
03-28-19

CURRENT ISSUE STATUS:

TRUE NORTH:

STATE OF CONNECTICUT
WILLIAM R. HARTLEY
31997
LICENSED PROFESSIONAL ENGINEER
2/20/19

SMRT Architects and Engineers
200 Brickstone Square, Suite 303
Andover, Massachusetts 01810
1.877.700.7678
www.smrtinc.com
ARCHITECTURE | ENGINEERING | PLANNING | INTERIORS | ENERGY
SMRT

UNIVERSITY OF SAINT JOSEPH ATHLETIC FIELD RENOVATIONS

1678 ASYLUM AVE., W. HARTFORD, CT 06117

ELECTRICAL SITE POWER PLAN

SHEET TITLE:

0' 15' 30' 60' 90'

SCALE: 1"=30'-0"

PROJECT MANAGER:	RFW	PROJECT NO:	19014
A/E OF RECORD:	WRH		
JOB CAPTAIN:	–		
DRAWN BY:	TMS		
SMRT FILE:	ES100-19014.dwg	SHEET No.	ES100

©COPYRIGHT 2019 SMRT INC

NOT FOR CONSTRUCTION

24X36

PHOTOMETRIC CALCULATIONS DO NOT TAKE THE EXISTING VEGETATIVE BUFFER INTO CONSIDERATION WHEN GENERATING LIGHTING DATA

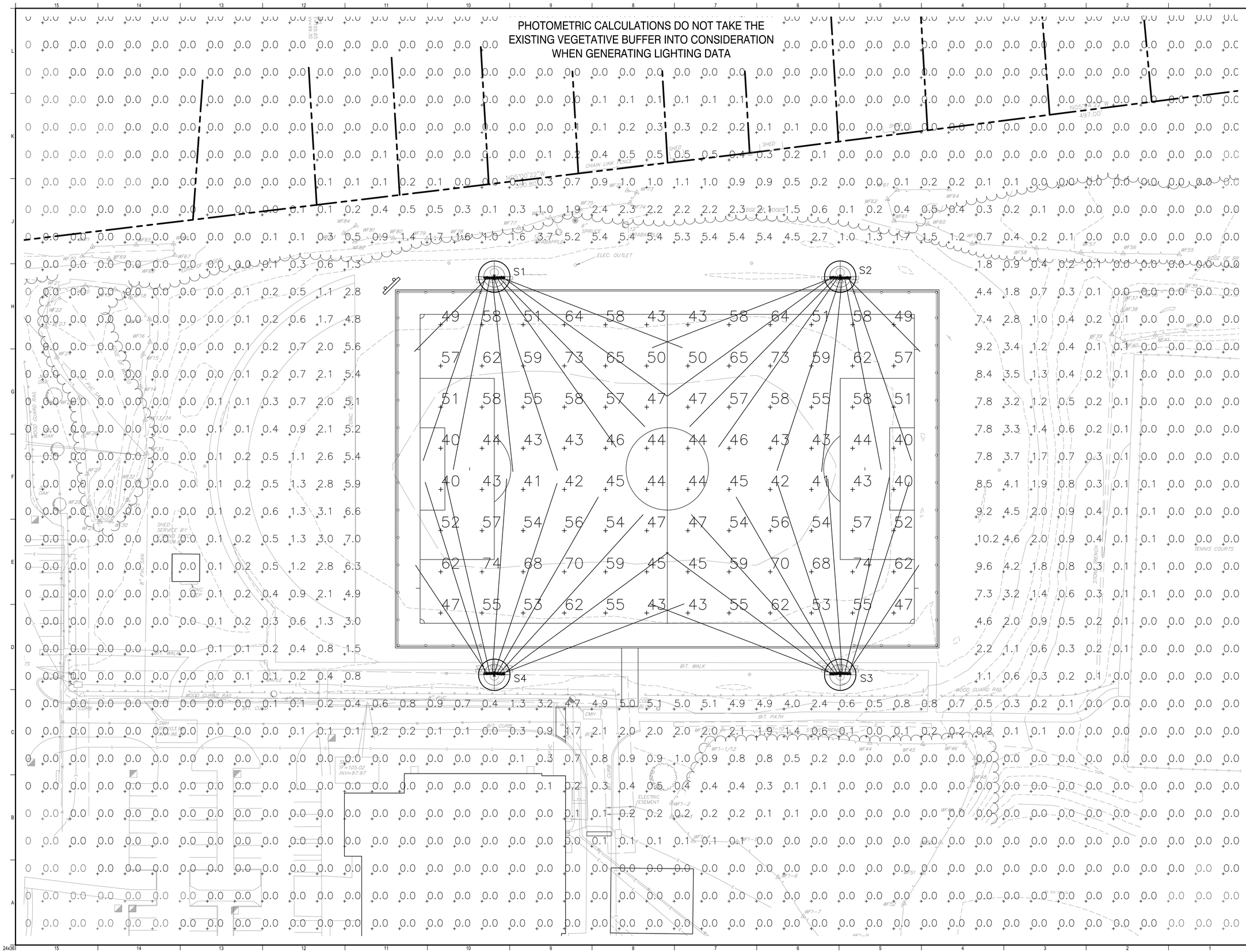

REV	DESCRIPTION	DATE
2	REISSUED FOR PERMITTING	03-28-19
1	REISSUED FOR PERMITTING	03-22-19
0	ISSUED FOR PERMITTING	02-20-19

REISSUED FOR PERMITTING
03-28-19

CURRENT ISSUE STATUS:

TRUE NORTH:

SMRT Architects and Engineers
200 Brickstone Square, Suite 303
Andover, Massachusetts 01810
1.877.700.7678
www.smrtinc.com
ARCHITECTURE | ENGINEERING | PLANNING | INTERIORS | ENERGY

UNIVERSITY OF SAINT JOSEPH
ATHLETIC FIELD RENOVATIONS

1678 ASYLUM AVE., W. HARTFORD, CT 06117

FIELD LIGHTING
PHOTOMETRIC PLAN

SHEET TITLE:

0' 30' 60' 90'

SCALE: 1"=30'-0"

PROJECT MANAGER:	RFW	PROJECT NO:	19014
A/E OF RECORD:	MAF		
JOB CAPTAIN:	–		
DRAWN BY:	JSM		
SMRT FILE:	ES101-19014.dwg	SHEET No.	ES101

© COPYRIGHT 2019 SMRT INC.

NOT FOR CONSTRUCTION

24x36