TOWN OF WEST HARTFORD

DEPARTMENT OF COMMUNITY DEVELOPMENT

DIVISION OF ENGINEERING

Plans For

MOUNTAIN ROAD AT ALBANY AVENUE (ROUTE 44) INTERSECTION IMPROVEMENTS

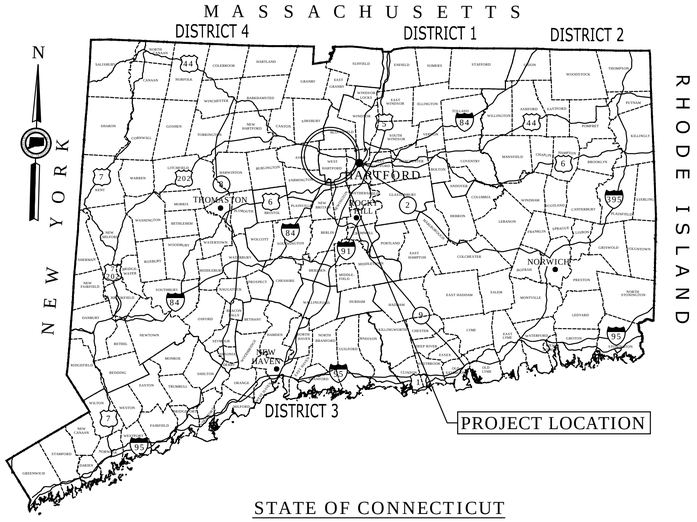

STATE OF CONNECTICUT

ROAD	MAINTENANCE RESPONSIBILITY	FUNCTIONAL CLASSIFICATION	LENGTH
MOUNTAIN ROAD	TOWN	MINOR URBAN ARTERIAL	1,600 FEET
ALBANY AVENUE (ROUTE 44)	STATE	PRINCIPAL URBAN ARTERIAL	200 FEET

REQUIRED PERMITS

- CT DEEP - SECTION 401 WATER QUALITY PERMIT (SV)
- ARMY CORP OF ENGINEERS - SECTION 404 PERMIT (SV-19)
- WEST HARTFORD INLAND WETLANDS AND WATERCOURSES PERMIT
- CT DOT ENCROACHMENT PERMIT (DISTRICT 1)
- CT DOT TRAFFIC SIGNAL APPROVAL - STATE OWNED SIGNAL (DISTRICT 1)

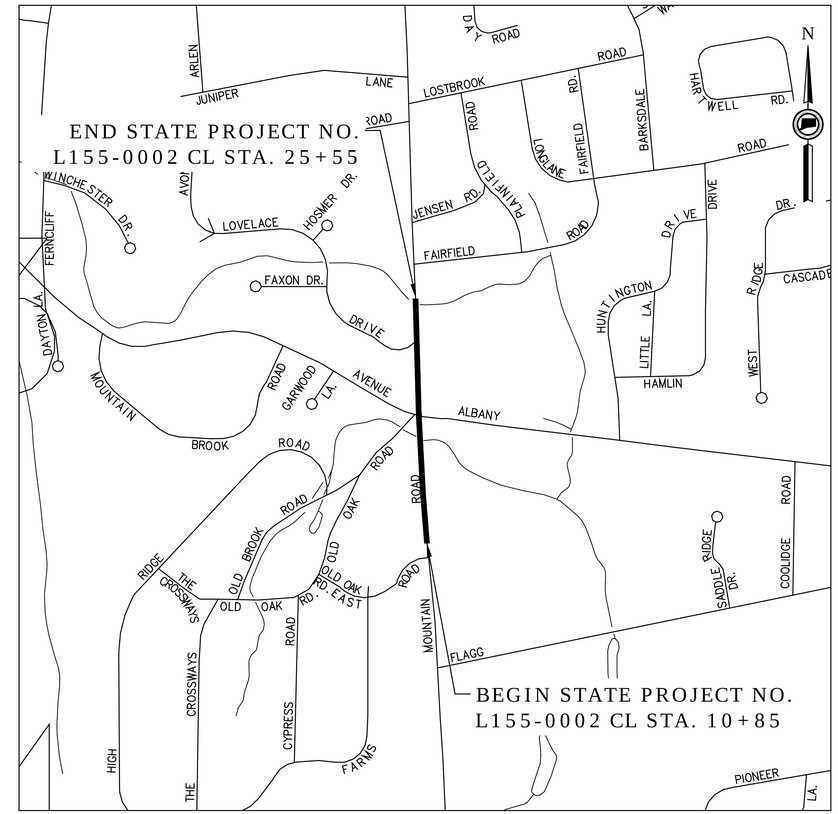

LOCATION PLAN

NOT TO SCALE

DESIGN CRITERIA - MOUNTAIN ROAD MINOR URBAN ARTERIALS (3R PROJECTS)

DESIGN SPEED: 40 MPH
TRAVEL LANE WIDTHS: 10'
SHOULDER WIDTHS: 0'-4'*
TURN LANE WIDTHS: 10'
STOPPING SIGHT DISTANCE: 305'
DECISION STOPPING SIGHT DISTANCE: 690'
MINIMUM RADIUS: 490' (e=4%)
HORIZONTAL SIGHT DISTANCE: 305'
MAXIMUM GRADE: 10%
MINIMUM GRADE: 0.5%
VERTICAL CURVATURE (K-VALUE): 43 (CREST)/64 (SAG)
INTERSECTION SIGHT DISTANCE: 445' (RIGHT TURN)/475' (LEFT TURN)
ROADSIDE CLEAR ZONES: 14'-16' (DESIRABLE)
SIDEWALK WIDTH: 5'*
BICYCLE LANE WIDTH: 5'*

* DESIGN EXCEPTION - Refer to Design Report for explanation and justification.
Design criteria based on the Connecticut Department of Transportation - Highway Design Manual - 2003 edition (Including revisions to February 2013)

GENERAL NOTES:

1. CONSTRUCTION SPECIFICATIONS:
   Connecticut Department of Transportation, Standard Specifications for Roads, Bridges, and Incidental Construction, Form 817, dated 2016; and Special Provisions
2. BASED ON CONNECTICUT COORDINATE SYSTEM NAD83
3. VERTICAL DATUM BASED ON NGVD29
4. DESIGNED IN ACCORDANCE WITH AASHTO 2012 GUIDE FOR THE DEVELOPMENT OF BICYCLE FACILITIES
5. DESIGNED IN ACCORDANCE WITH CT DEEP 2002 GUIDELINES FOR SOIL EROSION AND SEDIMENTATION CONTROL

DISCLAIMER

IT IS THE RESPONSIBILITY OF EACH BIDDER AND ALL OTHER INTERESTED PARTIES TO OBTAIN ALL BIDDING RELATED INFORMATION AND DOCUMENTS FROM OFFICIAL SOURCES WITHIN THE TOWN.

PERSONS AND/OR ENTITIES WHICH REPRODUCE AND/OR MAKE SUCH INFORMATION AVAILABLE BY ANY MEANS ARE NOT AUTHORIZED BY THE TOWN TO DO SO AND MAY BE LIABLE FOR CLAIMS RESULTING FROM THE DISSEMINATION OF UNOFFICIAL, INCOMPLETE AND/OR INACCURATE INFORMATION.

LIST OF DRAWINGS

DRAWING TITLE	DRAWING NO.
TITLE SHEET	TSH-01
DETAILED ESTIMATE	EST-01 *
INDEX PLAN	INX-01
TYPICAL SECTIONS	TYP-01
MISCELLANEOUS DETAILS	MDS-01 - MDS-10
PLAN SHEET - STA. 10+00 - 15+50	PLN-01
PROFILE SHEET - STA. 10+00 - 15+50	PRO-01 *
PLAN SHEET - STA. 15+50 - 21+50	PLN-02
PROFILE SHEET - STA. 15+50 - 21+50	PRO-02 *
PLAN SHEET - STA. 21+50 - 27+50	PLN-03
PROFILE SHEET - STA. 21+50 - 27+50	PRO-03 *
TRAFFIC CONTROL SIGNAL PLAN	TCS-01 *
SIGNING AND PAVEMENT MARKING	SPM-01 - SPM-04 *
LANDSCAPE PLAN	LDS-01
CROSS SECTIONS	XSC-01 - XSC-13 *

LIST OF DRAWINGS (CONTINUED)

DRAWING TITLE	DRAWING NO.
HIGHWAY STANDARD SHEET INDEX	HWY-INX-01 *
TRAFFIC STANDARD SHEET INDEX	TR-INX-01 *

*NOT INCLUDED THIS SUBMITTAL

STANDARD CONVENTIONS

North Arrow
Edge Of Road
Concrete Pavement
B.C.L.C.
Granite Curb
Guide Rail
Sidewalk (Bit. or Conc.)
Highway Line
Property Line
Easement Line
Overhead Power Line
Storm Drain
Gas Main
Sanitary Sewer
Water Main
Watercourse Edge
Limit of Disturbance
Inland Wetland Limit
100-Year Flood Limit
150' Regulated Area
Silt Fence
Wood or PVC Fence
Chain Link Fence
Guide Rail
Existing Contour (Major)
Existing Contour (Minor)
Proposed Contour (Major)
Proposed Contour (Minor)
Retaining Wall
Stone Wall
Riprap
Tree Line
Unknown Tree/Shrub
Proposed Tree
Evergreen Tree
Deciduous Tree
Building
Utility Pad/Structure
Traffic Signal Pole
Traffic Signal Cabinet
Utility Pole

THE DESIGN APPEARS TO CONFORM TO APPLICABLE CRITERIA. APPROVAL IS NOT TO BE CONSTRUED TO MEAN THAT ALL ASPECTS OF THE DESIGN HAVE BEEN PERSONALLY CHECKED BY THE UNDERSIGNED.

DESIGNED BY:
TOWN OF WEST HARTFORD
ENGINEERING DIVISION
50 SOUTH MAIN STREET, ROOM 204
WEST HARTFORD, CT 06107

TOWN MANAGER
APPROVED BY: _____

TOWN ENGINEER
APPROVED BY: _____

NOT FOR CONSTRUCTION
PERMIT PLAN SET (60%)

Plans For
MOUNTAIN ROAD AT ALBANY AVENUE (ROUTE 44) INTERSECTION IMPROVEMENTS

Town of
WEST HARTFORD

INLAND WETLANDS PERMIT: APRIL 2019

PROJECT NO.	DRAWING NO.
L155-0002	TSH-01
	SHEET NO. 01.01

Border VERSION 05/27/11

GENERAL NOTES:

1) THE CONTRACTOR IS RESPONSIBLE FOR ESTABLISHING AND MAINTAINING CONSTRUCTION SITE SAFETY MEASURES.
2) THE CONTRACTOR SHALL NOTIFY "CALL BEFORE YOU DIG" 1-800-922-4455 AT LEAST 72 HOURS PRIOR TO COMMENCING ANY CONSTRUCTION ACTIVITIES.
3) WORK HOURS SHALL BE IN ACCORDANCE WITH TOWN OF WEST HARTFORD NOISE ORDINANCE, UNLESS A WAIVER IS OBTAINED FROM THE WEST HARTFORD-BLOOMFIELD HEALTH DISTRICT. REFER TO SPECIFICATIONS SECTION 1.08 - PROSECUTION AND PROGRESS AND SPECIFICATION SECTION 5.13.
4) THE TOWN OF WEST HARTFORD'S POLICY REGARDING THE USE OF TRAFFIC CONTROL PERSONNEL DURING CONSTRUCTION WITHIN THE STREET RIGHT OF WAY (REFER TO SPECIFICATION SECTION 8.02) RESTRICTS THE WORKING HOURS ON MOUNTAIN ROAD TO THE HOURS OF 8:30AM TO 3:30PM AND ON ALBANY AVENUE TO THE HOURS OF 8:30AM TO 4:00PM. THE CONTRACTOR MAY SUBMIT A WRITTEN REQUEST TO THE TOWN ENGINEER TO EXTEND THE WORKING HOURS. THE REQUEST WILL ONLY BE APPROVED IF THE EXTENDED WORKING HOURS DO NOT POSE A SAFETY RISK TO WORKERS AND THE GENERAL PUBLIC, OR SIGNIFICANTLY IMPACT THE FLOW OF TRAFFIC.
5) EROSION AND SEDIMENTATION CONTROL WILL CONFORM TO THE 2002 CONNECTICUT GUIDELINES FOR SOIL EROSION AND SEDIMENT CONTROL.
6) PROVIDE AND MAINTAIN SILT SACKS FOR EROSION AND SEDIMENTATION CONTROL AT ALL EXISTING AND PROPOSED CATCH BASINS LOCATED WITHIN THE LIMITS OF WORK.
7) PUBLIC ROADWAYS SHALL BE KEPT CLEAN OF DIRT AND OTHER DEBRIS. PROJECT AREA SHALL BE SWEPT AT THE END OF EACH WORK DAY AND THROUGHOUT THE DAY AS FIELD CONDITIONS WARRANT.
8) STAGING AREAS SHALL BE REVIEWED AND APPROVED BY THE ENGINEER. MATERIALS AND EQUIPMENT MUST BE REMOVED FROM THE EDGE OF THE ROADWAY AT THE END OF EACH WORK DAY.

PHASING NOTES:

1) CONTRACTOR SHALL PROVIDE A PLAN DETAILING THE SEQUENCE OF CONSTRUCTION PRIOR TO PRE-CONSTRUCITON MEETING.
2) MAINTENANCE AND PROTECTION OF TRAFFIC SHALL BE PER CONNDOT AND TOWN OF WEST HARTFORD STANDARDS AS IDENTIFIED IN THE CONTRACT DOCUMENTS.
3) ROUTE 44 (ALBANY AVENUE) AND MOUNTAIN ROAD SHALL REMAIN OPEN TO VEHICLES AT ALL TIMES.

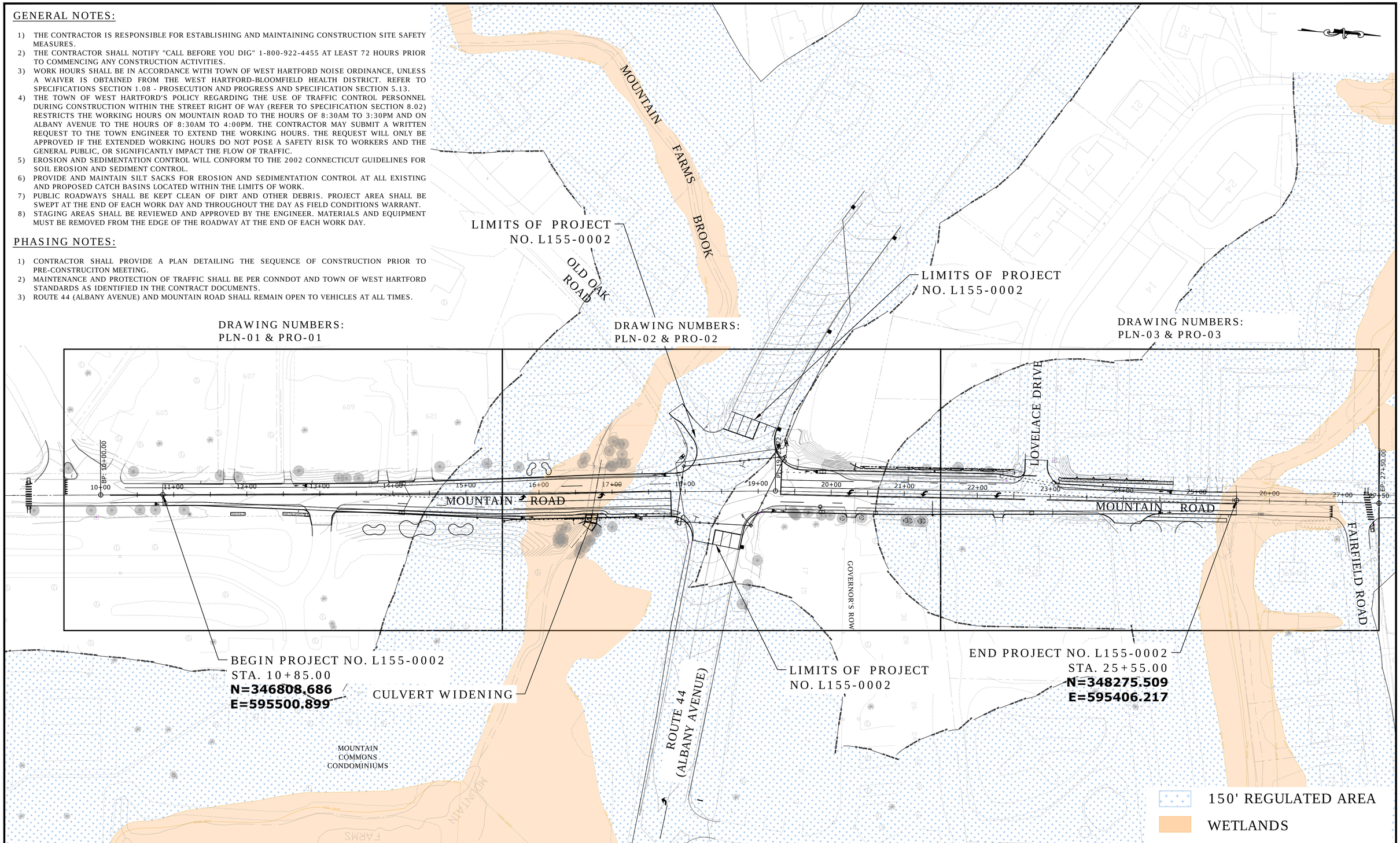

REV.	DATE	REVISION DESCRIPTION	SHEET NO.

Plotted: 03/22/2019

DESIGNER/DRAFTER: G. SOMMER
CHECKED BY: TOWN OF W. HARTFORD
SCALE IN FEET: 0 60 120

TOWN OF WEST HARTFORD
DEPARTMENT OF COMMUNITY DEVELOPMENT
DIVISION OF ENGINEERING
50 SOUTH MAIN STREET · ROOM 204 · WEST HARTFORD · CT · 06107

Filename:01.01_HW_INX-01_L155_0002

SIGNATURE/BLOCK: -
APPROVED BY: DATE:

PROJECT TITLE: MOUNTAIN ROAD AT ALBANY AVENUE (ROUTE 44) INTERSECTION IMPROVEMENTS

TOWN: WEST HARTFORD
DRAWING TITLE: INDEX PLAN

PROJECT NO. L155-0002
DRAWING NO. INX-01
SHEET NO. 01.04

Border Version: 10/19/07

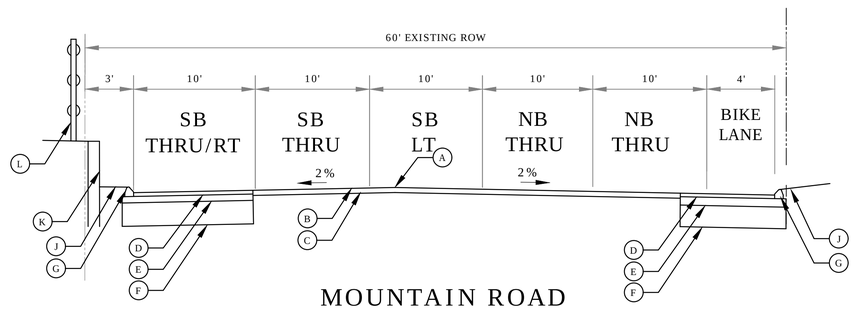

MOUNTAIN ROAD
NORTH OF ALBANY AVENUE
STA. 19+30 TO 22+30

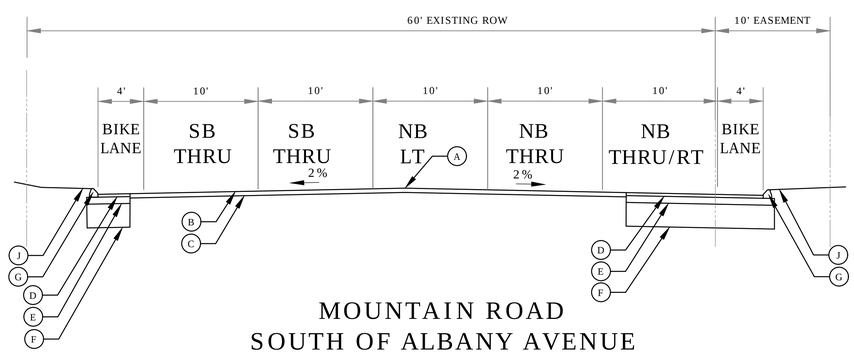

MOUNTAIN ROAD
SOUTH OF ALBANY AVENUE
STA. 16+30 TO 17+80

LEGEND

- Ⓐ POINT OF APPLICATION
- Ⓑ MILL 0-3 INCHES
- Ⓒ 2" PMA S0.5 OVER 1" PMA S0.25 (LEVELING COURSE)
- Ⓓ 2" PMA S0.5 (SEE NOTE #2)
- Ⓔ 3" HMA S1.0
- Ⓕ 12" SUBBASE
- Ⓖ BITUMINOUS CONCRETE LIP CURB
- Ⓗ CONCRETE SIDEWALK - 5" THICK (TYP.)
- Ⓘ 10" PROCESSED AGGREGATE BASE
- Ⓙ 4" TOPSOIL & TURF ESTABLISHMENT
- Ⓚ RETAINING WALL
- Ⓛ VINYL FENCE (FUTURE MAINTENANCE BY PROPERTY OWNER)

GENERAL NOTES:

1. PAVEMENT STRUCTURE DESIGNED IN ACCORDANCE WITH THE 1993 AASHTO GUIDE FOR DESIGN OF PAVEMENT STRUCTURES.
2. IN AREAS OF MOUNTAIN ROAD WHERE WIDENING IS REQUIRED, THE FINISHED PAVEMENT SURFACE (2" PMA S0.5) SHALL BE PLACED IN CONJUNCTION WITH THE ROADWAY RESURFACING TO PROVIDE A UNIFORM WEARING SURFACE WITH MINIMAL JOINTS.

REV.	DATE	REVISION DESCRIPTION	SHEET NO.

Plotted: 03/21/2019

DESIGNER/DRAFTER: G. SOMMER
CHECKED BY: TOWN OF W. HARTFORD
NOT TO SCALE

TOWN OF WEST HARTFORD
DEPARTMENT OF COMMUNITY DEVELOPMENT
DIVISION OF ENGINEERING
50 SOUTH MAIN STREET · ROOM 204 · WEST HARTFORD · CT · 06107

Filename:01.01_HW_TYP-01_L155_0002

SIGNATURE/ BLOCK: -
APPROVED BY: DATE:

PROJECT TITLE: MOUNTAIN ROAD AT ALBANY AVENUE (ROUTE 44) INTERSECTION IMPROVEMENTS

TOWN: WEST HARTFORD
DRAWING TITLE: TYPICAL SECTIONS MOUNTAIN ROAD

PROJECT NO. L155-0002
DRAWING NO. TYP-01
SHEET NO. 01.05

Border Version: 10/19/07

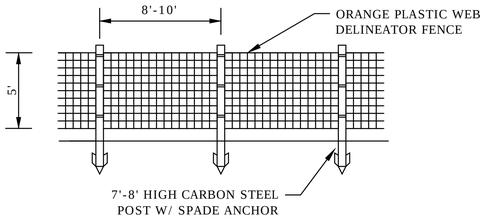

NOTE: INSTALL PROTECTIVE FENCE AROUND DRIP LINE OF TREES ADJACENT TO EXCAVATION AREA; IF DRIP LINE INTERSECTS EXCAVATION AREA, FENCE MAY BE TEMPORARILY REMOVED AND REPLACED ONCE THE WORK IS COMPLETE.

PROTECTIVE FENCING FOR TREES

NOT TO SCALE

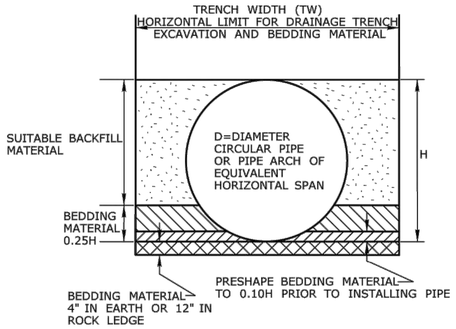

PIPE TRENCH FOR PIPES LESS THAN 48"

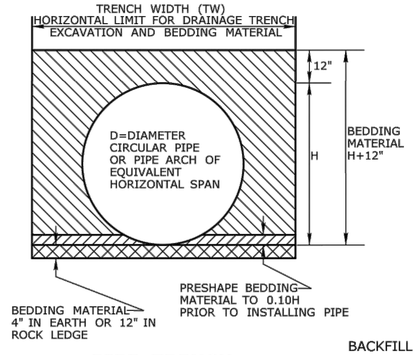

PIPE TRENCH FOR PIPES GREATER THAN OR EQUAL TO 48"

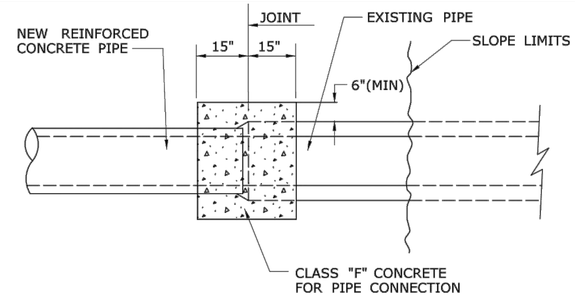

PLAN

NOTES:

1. "CONCRETE PIPE CONNECTION" IS INTENDED FOR USE WHERE A REINFORCED CONCRETE PIPE REPAIR OR MODIFICATION IS NEEDED SOMEWHERE WITHIN A PIPE RUN WHERE A BELL/SPIGOT JOINT CANNOT BE ACHIEVED.
2. MAINTAIN INTERIOR ALIGNMENT OF PIPE AT JOINTS UNTIL CONCRETE IS PROPERLY CURED.
3. BACKFILL OF PIPE REPAIR WITH SUITABLE MATERIAL MAY NOT TAKE PLACE UNTIL CONCRETE IS PROPERLY CURED.
4. CONTRACTOR SHALL MAINTAIN LINE AND GRADE OF PIPE REPAIR OR MODIFICATION BY METHODS APPROVED BY THE ENGINEER.
5. HOLES OR GAPS AT JOINT LARGER THAN 3/8" SHALL BE FILLED OR WRAPPED TO PREVENT CONCRETE FROM ENTERING PIPE.

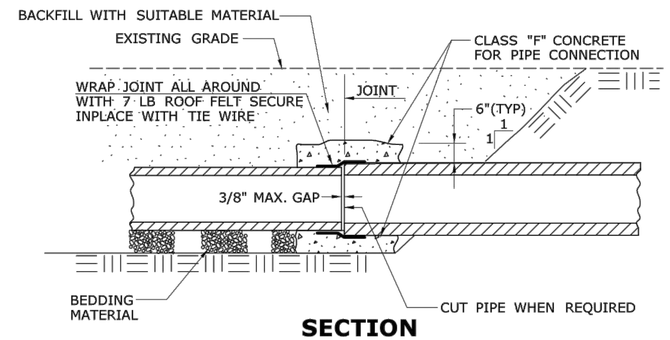

SECTION
CONCRETE PIPE CONNECTION

TRENCH WIDTH (TW) CHART

PIPE, PIPE-ARCH, OR DRAINAGE STRUCTURE	TRENCH WIDTH
PIPE OR PIPE-ARCH WITH NOMINAL INSIDE HORIZONTAL SPAN LESS THAN 30"	2' GREATER THAN NOMINAL INSIDE HORIZONTAL SPAN
PIPE OR PIPE-ARCH WITH NOMINAL INSIDE HORIZONTAL SPAN GREATER THAN OR EQUAL TO 30"	3' GREATER THAN NOMINAL INSIDE HORIZONTAL SPAN
PIPE OR PIPE-ARCH FABRICATED FROM STRUCTURAL PLATES	4' GREATER THAN NOMINAL INSIDE HORIZONTAL SPAN
DRAINAGE STRUCTURES	2' BEYOND ALL EXTERIOR OR FOUNDATION WALLS

NOTE: WARNING TAPE SHALL BE PLACED IN GRAVEL 12" ABOVE PIPE

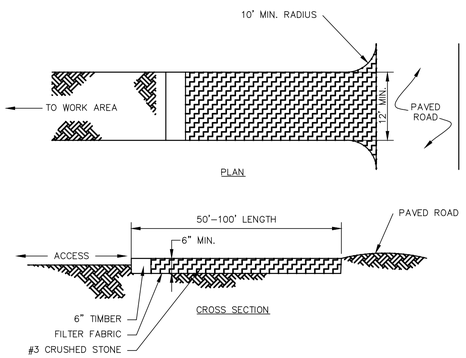

GENERAL NOTES

1. REMOVE TOPSOIL AND ORGANICS PRIOR TO CRUSHED STONE PLACEMENT.
2. INSTALL SUB-BASE OF FREE DRAINING BACKFILL OR ROAD STABILIZATION GEOTEXTILE AS NECESSARY ON UNSTABLE SOILS.
3. CONSTRUCTION ENTRANCE TO BE PROVIDED FOR CULVERT WORK.

CONSTRUCTION ENTRANCE

NOT TO SCALE

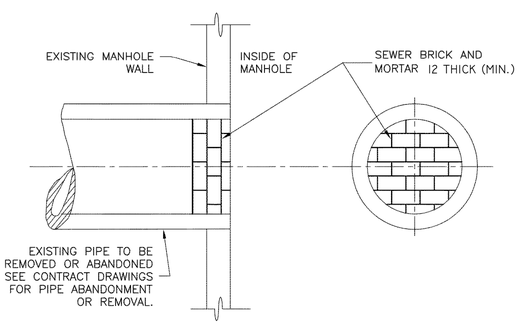

BULKHEAD STORM DRAIN PIPE

NOT TO SCALE

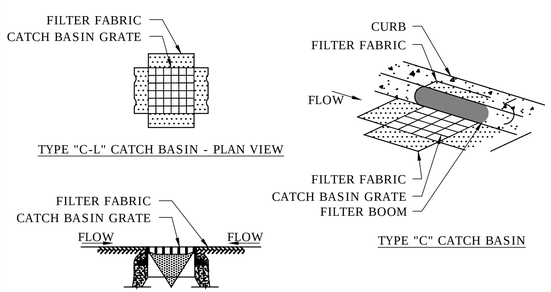

GENERAL NOTES

1. PROVIDE INLET PROTECTION TO ALL EXISTING CATCH BASINS IN THE VICINITY OF CONSTRUCTION. PROTECT NEW CATCH BASINS AS THEY ARE CONSTRUCTED.
2. GRATE TO BE PLACED OVER FILTER FABRIC.

CATCH BASIN FILTER SACK

NOT TO SCALE

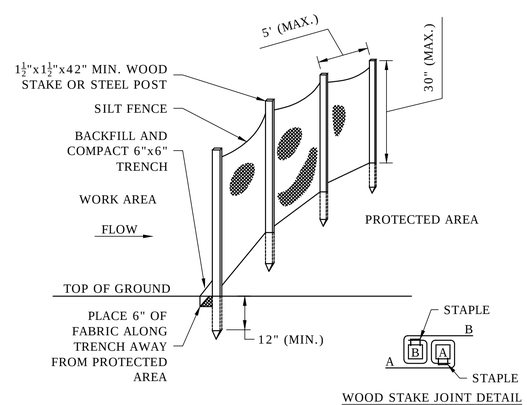

GENERAL NOTES

1. FOR SLOPE & SWALE INSTALLATIONS, EXTEND FENCE OP SLOPE SUCH THAT BOTTOM ENDS OF FENCE WILL BE HIGHER THAN THE TOP OF THE LOWEST PORTION OF FENCE.
2. FOR FENCE INSTALLED ON LEVEL TERRAIN INSTALL WING SECTIONS PERPENDICULAR TO MAIN BARRIER AT 50'-100' INTERVALS.

SEDIMENTATION CONTROL FILTER FABRIC FENCE SYSTEM (SILT FENCE)

NOT TO SCALE

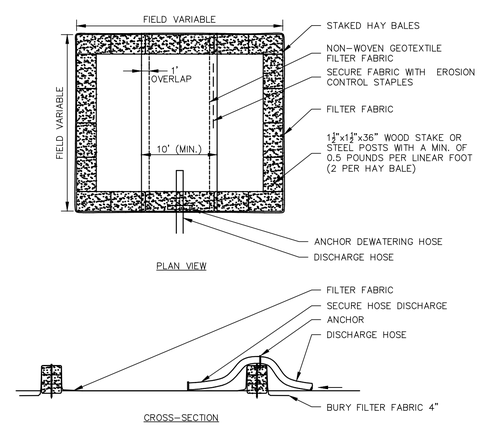

GENERAL NOTES

1. NUMBER OF BALES MAY VARY DEPENDING ON SITE CONDITIONS.
2. THE BASIN TO BE SIZED ACCORDING TO: CUBIC FEET OF STORAGE = PUMP DISCHARGE RATE(gpm) x 16.
3. SIZE SHOWN ON PLANS SHALL BE ADJUSTED AS REQUIRED FOR THE ACTUAL PUMPING RATE.

DEWATERING HAYBALE BASIN (TYPE1)

NOT TO SCALE

REV.	DATE	REVISION DESCRIPTION	SHEET NO.

Plotted: 03/21/2019

DESIGNER/DRAFTER: G. SOMMER
CHECKED BY: TOWN OF W. HARTFORD
NOT TO SCALE

TOWN OF WEST HARTFORD
DEPARTMENT OF COMMUNITY DEVELOPMENT
DIVISION OF ENGINEERING
50 SOUTH MAIN STREET · ROOM 204 · WEST HARTFORD · CT · 06107

Filename:01.01_HW_MDS-01_L155_0002

SIGNATURE/ BLOCK: -
APPROVED BY: DATE:

PROJECT TITLE: MOUNTAIN ROAD AT ALBANY AVENUE (ROUTE 44) INTERSECTION IMPROVEMENTS

TOWN: WEST HARTFORD

DRAWING TITLE: MISCELLANEOUS DETAILS
DRAINAGE/ EROSION CONTROL

PROJECT NO. **L155-0002**
DRAWING NO. MDS-07
SHEET NO. 01.12

Border Version: 10/19/07

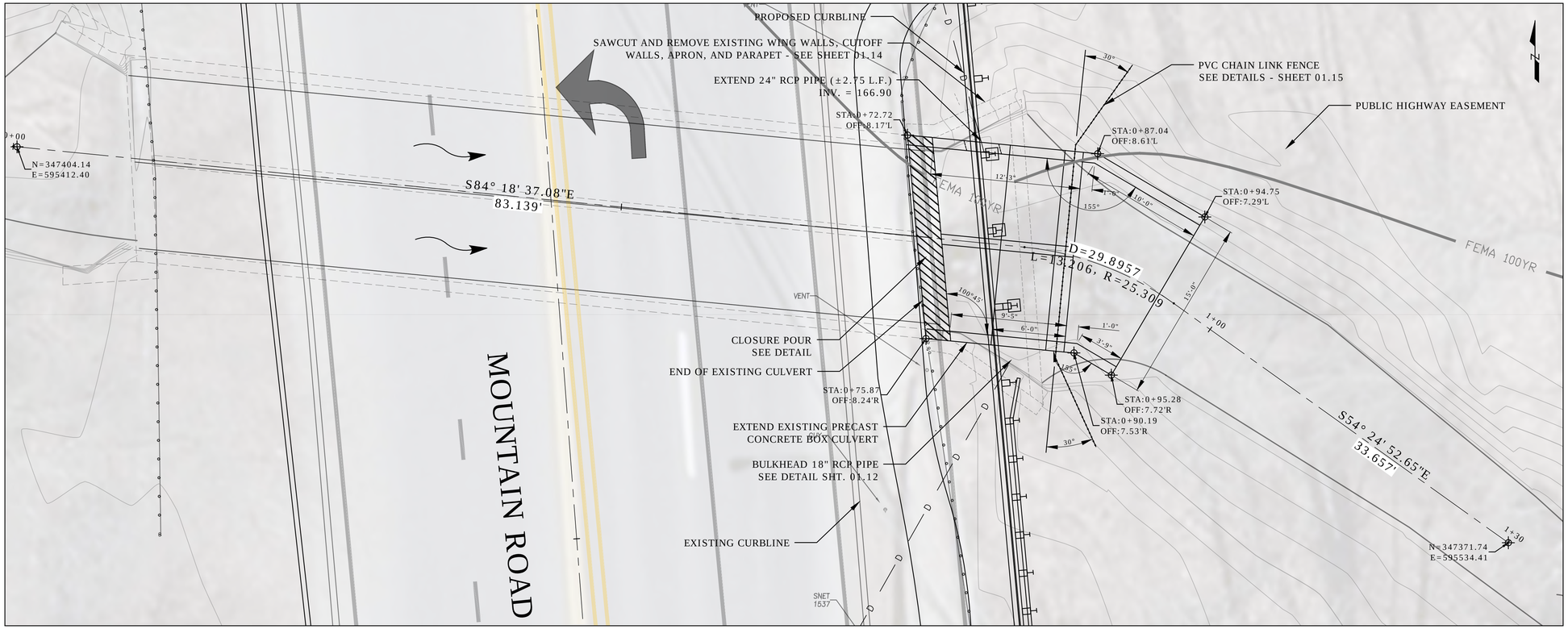

PRECAST BOX CULVERT
LAYOUT PLAN
SCALE: 1" = 5'

GENERAL NOTES:

SPECIFICATIONS: CONNECTICUT DEPARTMENT OF TRANSPORTATION FORM 817 (2016) AND ALL LATEST SUPPLEMENTAL SPECIFICATIONS THERETO.

DESIGN SPECIFICATIONS: AASHTO LRDF BRIDGE DESIGN SPECIFICATIONS (6TH EDITION), AS SUPPLEMENTED BY THE CONNECTICUT DEPARTMENT OF TRANSPORTATION BRIDGE DESIGN MANUAL (2003).

ALLOWABLE DESIGN STRESSES:
CLASS "F" CONCRETE BASED ON f'_c = 4,000 psi

CONCRETE:
THE SPECIFIED CONCRETE STRENGTH USED IN DESIGN (f'_C) OF THE CONCRETE COMPONENTS IS NOTED ABOVE. THE MINIMUM COMPRESSIVE STRENGTH OF THE CONCRETE IN THE CONSTRUCTED CONCRETE SHALL CONFORM TO THE REQUIREMENTS OF 'SECTION 6.01 CONCRETE FOR STRUCTURES'.

REINFORCEMENT: f_y = 60,000 psi (ASTM A615 GRADE 60)

FUTURE PAVING ALLOWANCE: NONE

UTILITY RELOCATIONS: THE CONTRACTOR WILL BE REQUIRED TO COORDINATE ALL UTILITY RELOCATION WORK NECESSARY TO FACILITATE THE EXTENSION OF THE CULVERT. RELOCATIONS (PERMANENT OR TEMPORARY) WILL BE THE RESPONSIBILITY OF THE INDIVIDUAL UTILITY OWNER. THE CONTRACTOR SHALL HAVE NO RIGHT TO CLAIM EXTRA COMPENSATION FOR DELAYS OR STAGING AND PHASING OF THE WORK DUE TO UTILITY RELOCATION WORK.

CONCRETE NOTES:

PRECAST CONCRETE: THE DESIGN OF PRECAST, NON-PRESTRESSED MEMBERS SHALL BE BASED ON A MINIMUM CONCRETE COMPRESSIVE STRENGTH OF NOT LESS THAN 4,000 psi. ALL ELEMENTS SHALL BE PRECAST WITH THE EXCEPTION OF THE CLOSURE POUR.

CLOSURE POUR: CLASS "f" CONCRETE SHALL BE USED FOR THE CLOSURE POUR. ALL REINFORCEMENT IN THE CLOSURE POUR SHALL BE EPOXY COATED UNLESS OTHERWISE NOTED.

JOINT SEAL:SEE SPECIAL PROVISIONS.

EXPOSED EDGES: EXPOSED EDGES OF CONCRETE SHALL BE BEVELED 1" x 1" UNLESS DIMENSIONS OTHERWISE.

REINFORCEMENT: ALL REINFORCEMENT SHALL BE ASTM A615 GRADE 60 WITH A MIN. 2" COVER UNLESS DIMENSIONED OTHERWISE.

CONSTRUCTION JOINTS: CONSTRUCTION JOINTS, OTHER THAN THOSE SHOWN ON THE PLANS, WILL NOT BE PERMITTED WITHOUT PRIOR APPROVAL OF THE ENGINEER.

PRECAST CONCRETE BOX CULVERT NOTES:

1. THE CONTRACTOR SHALL DESIGN, MANUFACTURE, AND CONSTRUCT PRECAST BOX CULVERT, PRECAST HEADWALLS, PRECAST CUTOFF AND RETURN WALLS IN ACCORDANCE WITH THESE PLANS AND THE SPECIAL PROVISIONS FOR "PRECAST BOX CULVERT".
2. THE CONTRACTOR SHALL FIELD VERIFY ALL DIMENSIONS SHOWN ON THE PLANS PRIOR TO PREPARING SHOP DRAWINGS.
3. FABRICATORS OF PRECAST CONCRETE BOX CULVERT, PRECAST HEADWALLS, PRECAST CUTOFF AND RETURN WALLS SHALL PROVIDE SHOP DRAWINGS AND DESIGN CALCULATIONS PREPARED, SIGNED, AND STAMPED BY A PROFESSIONAL ENGINEER LICENSED IN THE STATE OF CONNECTICUT. LOADS FROM PRECAST HEADWALLS, PARAPETS, AND PEDESTRIANS MUST BE ACCOUNTED FOR IN THE DESIGN.
4. ALL INSERTS OR HOLES CAST INTO THE CULVERT SECTION FOR THE SOLE PURPOSE OF HANDLING AND SETTING THE UNITS SHALL BE GROUTED OVER TO A SMOOTH FINISH UPON COMPLETION OF THE WORK.
5. NON-SHRINK GROUT SHALL BE USED TO GROUT THE REINFORCEMENT.
6. THE COST OF FURNISHING AND INSTALLING INSERTS SHALL BE INCLUDED IN THE ITEM "PRECAST CONCRETE CULVERT" AND SHALL BE ONE OF THE FOLLOWING:
   1. STAR EXPANSION INDUSTRIES CORP. TYPE P-35-T
   2. RICHMOND SCREW ANCHOR CO. TYPE LF
   3. DAYTON SUPERIOR CORP. TYPE F-57
7. THE #5 BARS WITH THREADED END SHALL BE COMPATIBLE WITH THE THREADED INSERTS (SEE NOTE #4). THREADS SHALL BE LONG ENOUGH TO FULLY ENGAGE THE INSERTS. THE THREADED BARS SHALL CONFORM TO THE REQUIREMENTS OF ASTM A615, GRADE 60.
8. ALL REINFORCEMENT TO HAVE 2" COVER UNLESS OTHERWISE NOTED.
9. CONTRACTOR SHALL SAWCUT AND REMOVE THE EXISTING CUTOFFWALL COMPLETELY AND THE EXISTING WINGWALLS SHALL BE REMOVED TO A DEPTH OF 12" BELOW THE EXISTING CULVERT INVERT. THIS WORK SHALL BE PAID FOR UNDER THE ITEM "REMOVAL OF EXISTING MASONRY"

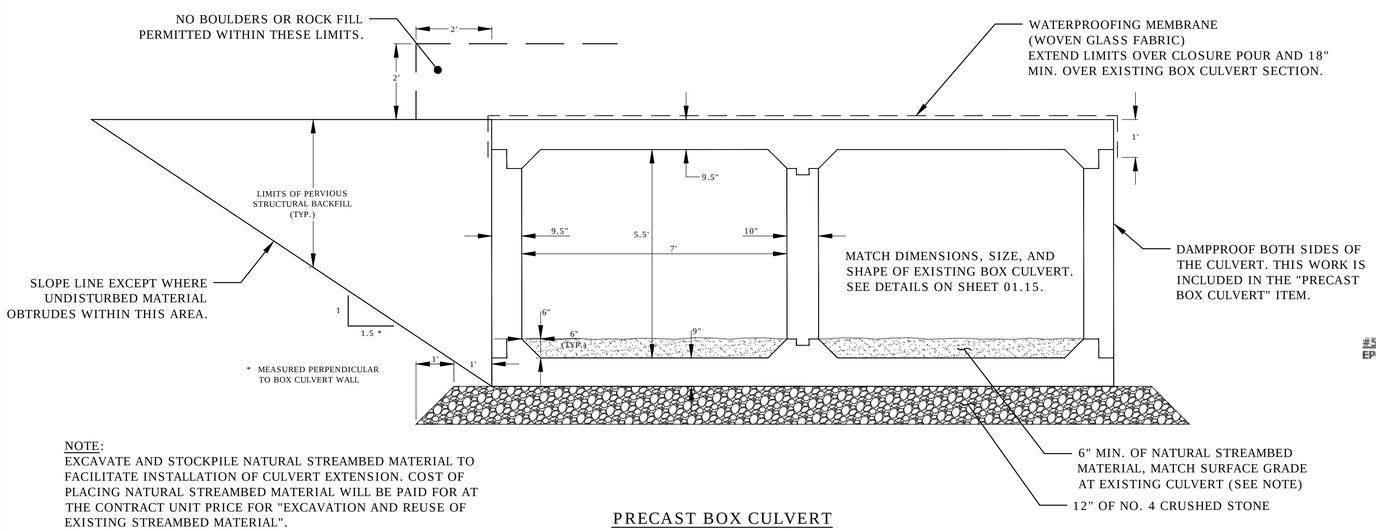

NOTE:
EXCAVATE AND STOCKPILE NATURAL STREAMBED MATERIAL TO FACILITATE INSTALLATION OF CULVERT EXTENSION. COST OF PLACING NATURAL STREAMBED MATERIAL WILL BE PAID FOR AT THE CONTRACT UNIT PRICE FOR "EXCAVATION AND REUSE OF EXISTING STREAMBED MATERIAL".

PRECAST BOX CULVERT
TYPICAL SECTION
SCALE: ½" = 1'

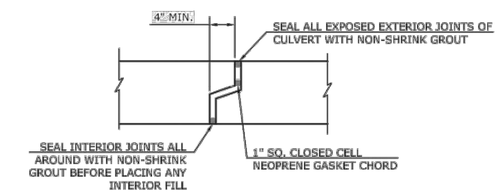

TRANSVERSE JOINT DETAIL
PRECAST CULVERT SECTIONS
SCALE 1"=1'-0"

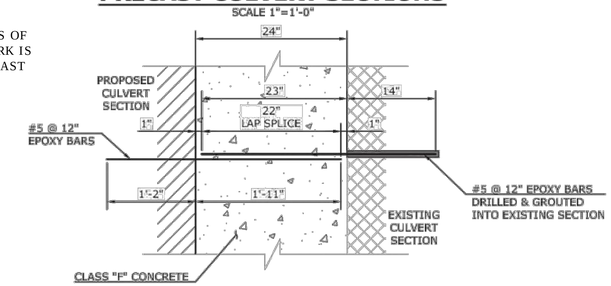

CLOSURE POUR DETAIL
SCALE 1"=1'-0"

REV.	DATE	REVISION DESCRIPTION	SHEET NO.

Plotted: 03/22/2019

DESIGNER/DRAFTER: G. SOMMER
CHECKED BY: TOWN OF W. HARTFORD
NOT TO SCALE

TOWN OF WEST HARTFORD
DEPARTMENT OF COMMUNITY DEVELOPMENT
DIVISION OF ENGINEERING
50 SOUTH MAIN STREET · ROOM 204 · WEST HARTFORD · CT · 06107

Filename:01.01_HW_MDS-01_L155_0002

SIGNATURE/BLOCK: -
APPROVED BY: DATE:

PROJECT TITLE: MOUNTAIN ROAD AT ALBANY AVENUE (ROUTE 44) INTERSECTION IMPROVEMENTS

TOWN: WEST HARTFORD
DRAWING TITLE: LAYOUT PLAN BOX CULVERT EXTENSION

PROJECT NO. L155-0002
DRAWING NO. MDS-08
SHEET NO. 01.13

Border Version: 10/19/07

NOTES:
1. TEMPORARY PRECAST CONCRETE BARRIER CURB SHALL REMAIN IN PLACE UNTIL CULVERT EXTENSION WORK, INCLUDING THE GUIDERAIL AND PVC CHAIN LINK FENCE IS COMPLETE.
2. POSITION TEMPORARY PRECAST CONCRETE BARRIER CURB IN A MANNER THAT WILL FACILITATE THE INSTALLATION OF THE PROPOSED METAL BEAM RAIL.

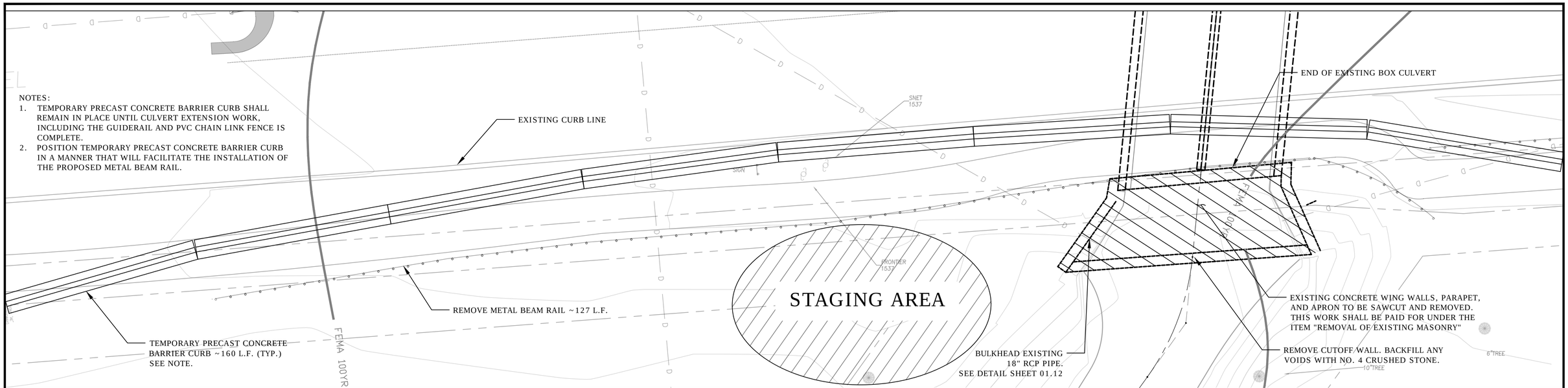

EXISTING BOX CULVERT DEMOLITION PLAN
SCALE: 1" = 5'

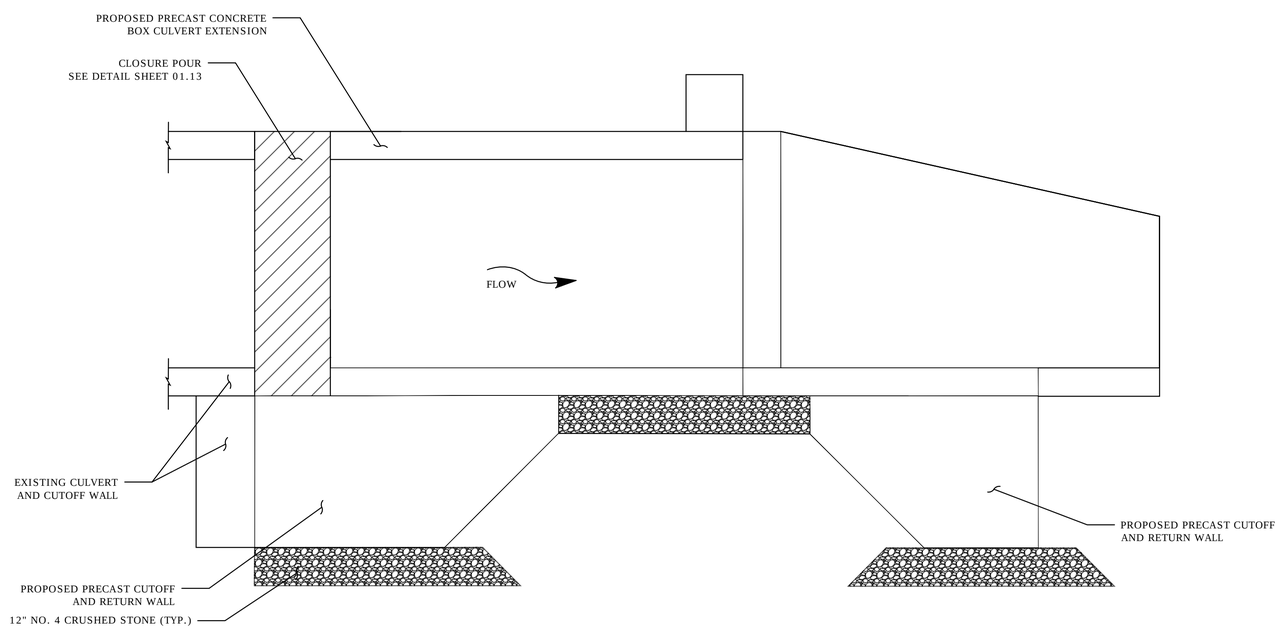

SECTION ALONG ℄ OF CULVERT AT OUTLET
SCALE: 1" = 2'

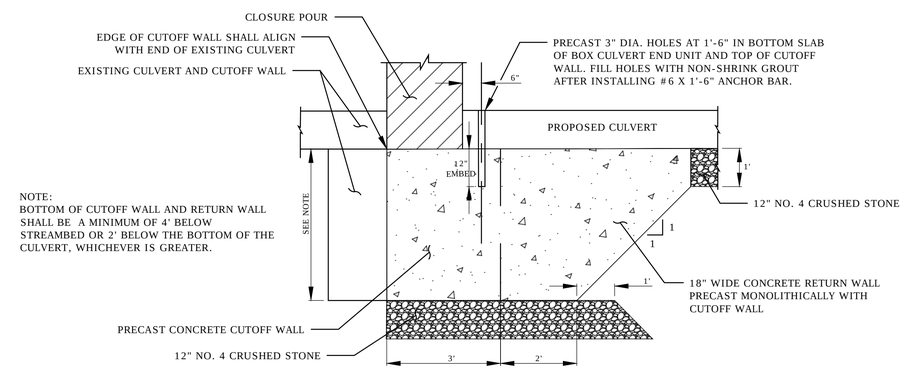

NOTE:
BOTTOM OF CUTOFF WALL AND RETURN WALL SHALL BE A MINIMUM OF 4' BELOW STREAMBED OR 2' BELOW THE BOTTOM OF THE CULVERT, WHICHEVER IS GREATER.

PRECAST CUTOFF AND RETURN WALL AT EXISTING CULVERT
SCALE: 1" = 2'

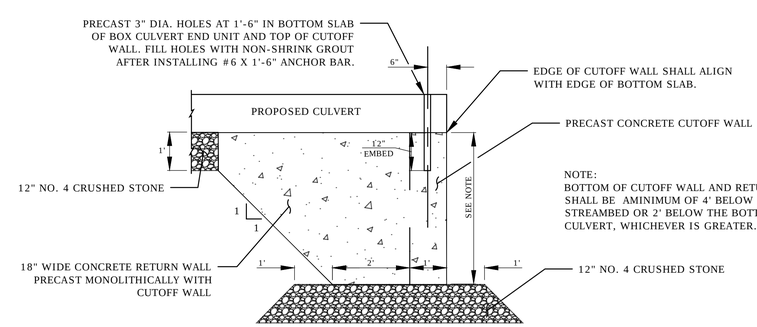

NOTE:
BOTTOM OF CUTOFF WALL AND RETURN WALL SHALL BE AMINIMUM OF 4' BELOW STREAMBED OR 2' BELOW THE BOTTOM OF THE CULVERT, WHICHEVER IS GREATER.

PRECAST CUTOFF AND RETURN WALL AT OUTLET
SCALE: 1" = 2'

REV.	DATE	REVISION DESCRIPTION	SHEET NO.

Plotted: 03/22/2019

DESIGNER/DRAFTER: G. SOMMER
CHECKED BY: TOWN OF W. HARTFORD
NOT TO SCALE

TOWN OF WEST HARTFORD
DEPARTMENT OF COMMUNITY DEVELOPMENT
DIVISION OF ENGINEERING
50 SOUTH MAIN STREET · ROOM 204 · WEST HARTFORD · CT · 06107
Filename:01.01_HW_MDS-01_L155_0002

SIGNATURE/ BLOCK:
APPROVED BY: DATE:

PROJECT TITLE: MOUNTAIN ROAD AT ALBANY AVENUE (ROUTE 44) INTERSECTION IMPROVEMENTS

TOWN: WEST HARTFORD

DRAWING TITLE: MISCELLANEOUS DETAILS BOX CULVERT EXTENSION

PROJECT NO. L155-0002
DRAWING NO. MDS-09
SHEET NO. 01.14

Border Version: 10/19/07

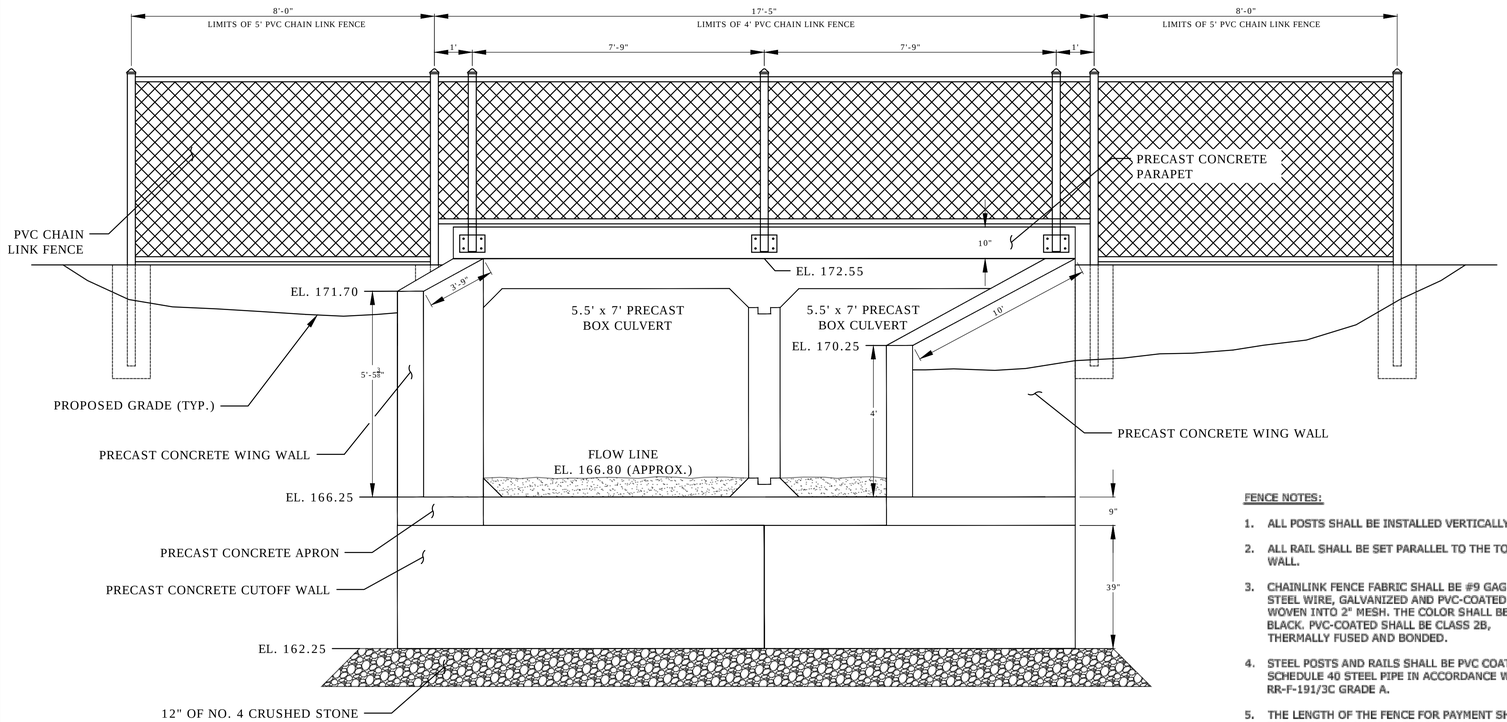

ELEVATION @ OUTLET LOOKING UPSTREAM

SCALE: ½" = 1'

FENCE NOTES:

1. ALL POSTS SHALL BE INSTALLED VERTICALLY.
2. ALL RAIL SHALL BE SET PARALLEL TO THE TOP OF WALL.
3. CHAINLINK FENCE FABRIC SHALL BE #9 GAGE STEEL WIRE, GALVANIZED AND PVC-COATED AND WOVEN INTO 2" MESH. THE COLOR SHALL BE BLACK. PVC-COATED SHALL BE CLASS 2B, THERMALLY FUSED AND BONDED.
4. STEEL POSTS AND RAILS SHALL BE PVC COATED SCHEDULE 40 STEEL PIPE IN ACCORDANCE WITH RR-F-191/3C GRADE A.
5. THE LENGTH OF THE FENCE FOR PAYMENT SHALL BE THE ACTUAL NUMBER OF LINEAR FEET OF CHAIN LINK FENCE, INSTALLED AND ACCEPTED, MEASURED HORIZONTALLY BETWEEN POSTS WITHIN THE LIMITS SHOWN ON PLANS.
6. FOR ADDITIONAL INFORMATION, SEE SPECIAL PROVISIONS "4' POLYVINYL CHLORIDE CHAIN LINK FENCE" AND "5' POLYVINYL CHLORIDE CHAIN LINK FENCE".

REQUIRED POST SIZE	REQUIRED SLEEVE SIZE
2"	2 ½"
2 ½"	3"
3"	3 ½"
3 ½"	4"

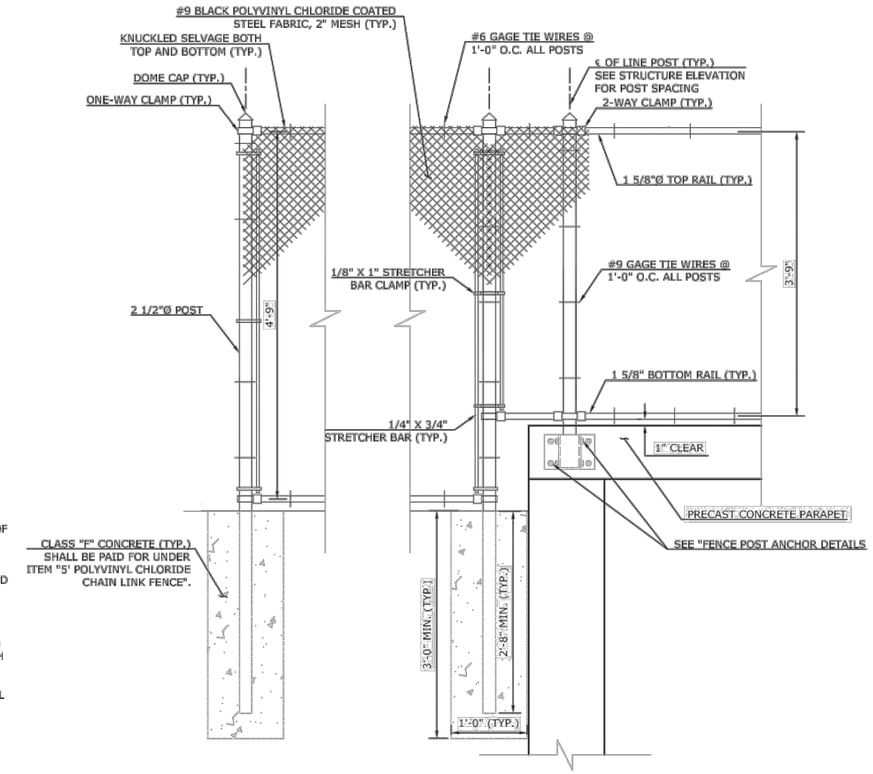

TYPICAL ELEVATION DETAIL - 4' AND 5' POLYVINYL CHLORIDE CHAIN LINK FENCE

NOT TO SCALE

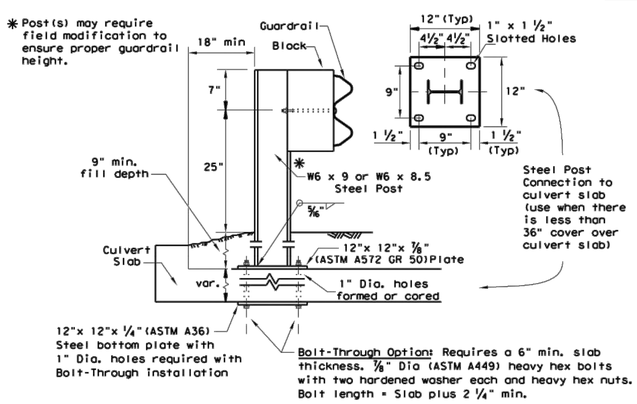

LOW FILL CULVERT POST

Culverts of 25 ft. or less, see GF(31)LS standard for "Long Span" option.

Epoxy Note:
Epoxy Anchor Option: This option may only be used if the culvert slab is 8" min. thick. Threaded anchor rods must be ⅞" Dia. ASTM A449 or A193 Grade B7 with heavy hex nut, and one hardened washer each. Embed anchor rods 6" with Hilti HIT RE 500 epoxy adhesive. Other Type III Class C epoxy adhesives meeting the requirements of DMS-6100, "Epoxies and Adhesives", may be used if it can be demonstrated that they meet or exceed the strength of Hilti HIT RE 500 with the same embedment depth and threaded rod dia. Follow the manufacturer's requirements for installing epoxied threaded rods. Extend rods ¼" min. beyond nut.

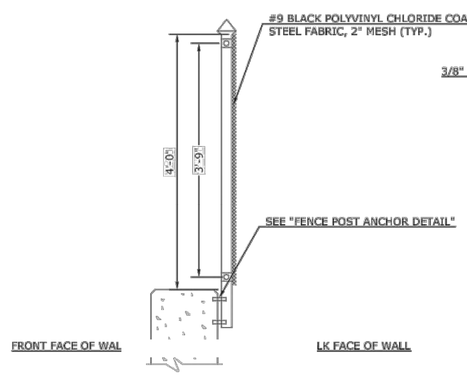

SIDE MOUNT TO WALL DETAIL

NOT TO SCALE

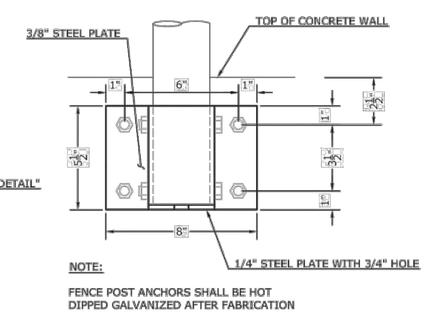

SIDE MOUNT FENCE POST ANCHOR DETAIL

NOT TO SCALE

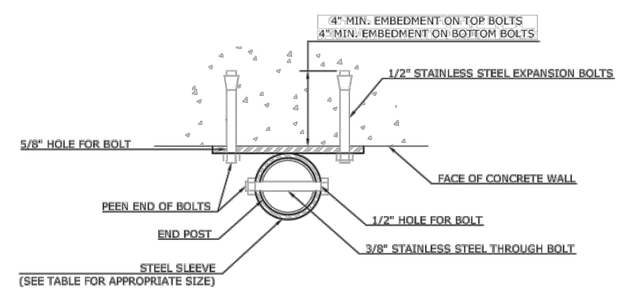

SIDE MOUNT FENCE POST SECTION

NOT TO SCALE

REV.	DATE	REVISION DESCRIPTION	SHEET NO.

Plotted: 03/21/2019

DESIGNER/DRAFTER: G. SOMMER
CHECKED BY: TOWN OF W. HARTFORD
NOT TO SCALE

TOWN OF WEST HARTFORD
DEPARTMENT OF COMMUNITY DEVELOPMENT
DIVISION OF ENGINEERING
50 SOUTH MAIN STREET · ROOM 204 · WEST HARTFORD · CT · 06107

Filename:01.01_HW_MDS-01_L155_0002

SIGNATURE/BLOCK: -
APPROVED BY: DATE:

PROJECT TITLE: MOUNTAIN ROAD AT ALBANY AVENUE (ROUTE 44) INTERSECTION IMPROVEMENTS

TOWN: WEST HARTFORD

DRAWING TITLE: MISCELLANEOUS DETAILS BOX CULVERT EXTENSION

PROJECT NO. L155-0002
DRAWING NO. MDS-10
SHEET NO. 01.15

Border Version: 10/19/07

F.H.W.A. DIV. OFF.	STATE	TOWN	FED. AID PROJ. NO.	PROJ. NO.	YEAR	ROUTE NO.	SHEET NO.	TOTAL SHEETS
	CONN.	WEST HARTFORD	MT-1155 (2)	155-99	1974		9	24

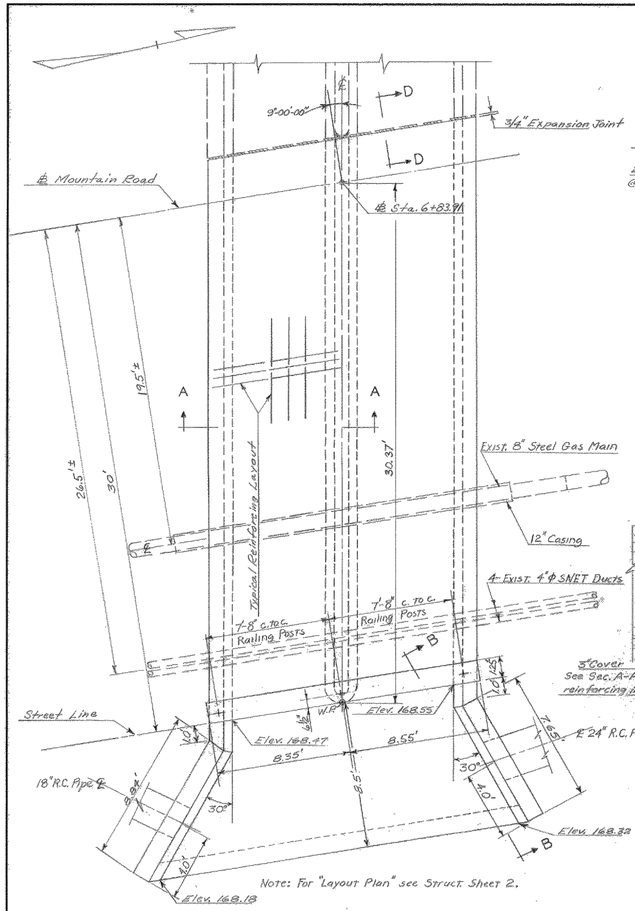

PLAN
Scale 1/4" = 1'

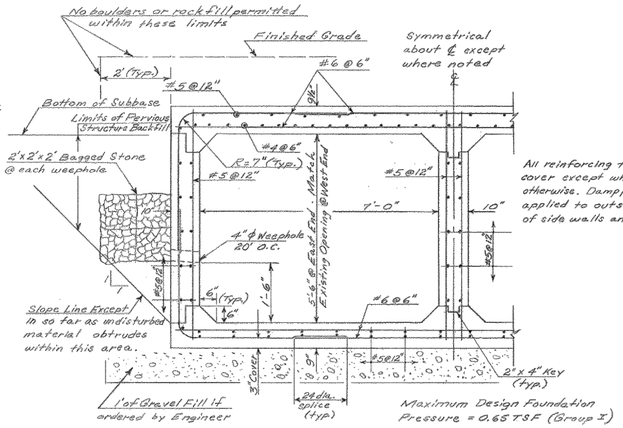

All reinforcing to have 2" min. cover except where noted otherwise. Dampproofing to be applied to outside surface of side walls and top slab.

SECTION A-A
Scale 1/2" = 1'

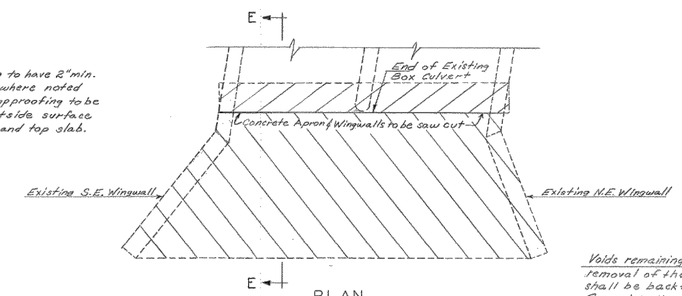

PLAN
(Showing existing concrete apron & wingwalls to be removed)
Scale 1/4" = 1'

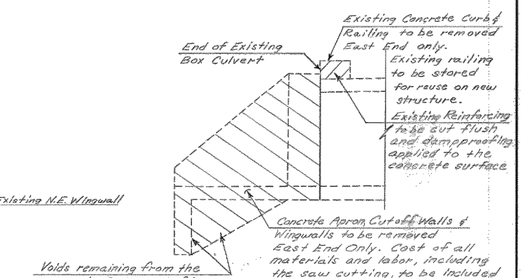

SECTION E-E
Scale 1/4" = 1'

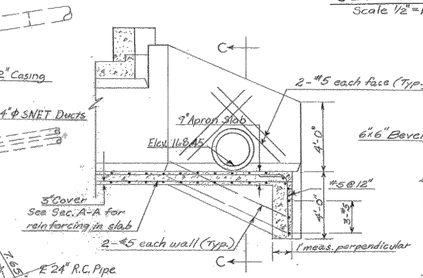

SECTION B-B
Scale 1/4" = 1'

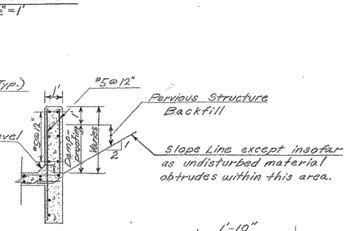

SECTION C-C

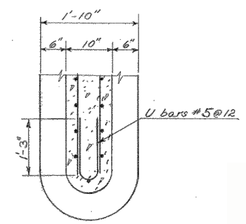

SECTION F-F
Scale 3/4" = 1'-0"

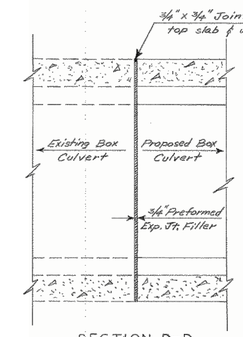

SECTION D-D
Scale 1/2" = 1'

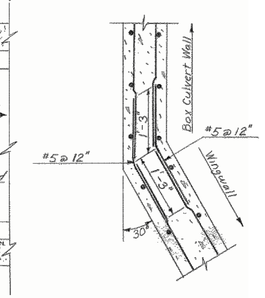

SECTION J-J
Scale 3/4" = 1'

GENERAL NOTES

SPECIFICATIONS: Connecticut State Highway Department Form 811 (1974), Interim Specifications and Special Provisions.

DESIGN SPECIFICATIONS: Standard Specifications for Highway Bridges (AASHO-1973) as supplemented by the Connecticut State Highway Department Bridge Manual (1964)

ALLOWABLE DESIGN STRESSES:
Class "A" Concrete fc = 1200 psi
Reinforcement (A615 Grade 40) fs (tensile) = 20,000 psi

LIVE LOAD: HS20-44

FUTURE PAVING ALLOWANCE: 30 pounds per square foot

CLASS "A" CONCRETE: Class "A" concrete, shall be used throughout.

JOINT SEAL: See Special Provisions

EXPOSED EDGES: Exposed edges shall be beveled 1"x1" unless dimensioned otherwise.

FOUNDATION PRESSURES:
The various Group Loadings noted on this sheet refer to the Group Loads as given in the AASHO Standard Specifications for Highway Bridges

CONSTRUCTION JOINTS: Construction joints, other than those shown on the plans, will not be permitted without prior approval of the Engineer

DIMENSIONS: Dimensions in decimals are shown to two decimal places. Omitted digits to the right of the decimal point or whole number are to be assumed as zeroes.

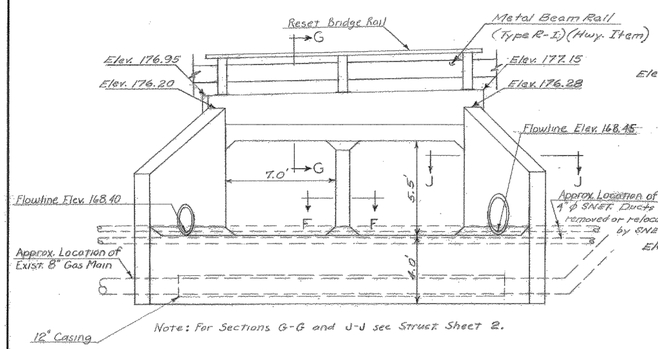

ELEVATION
Scale 1/4" = 1'

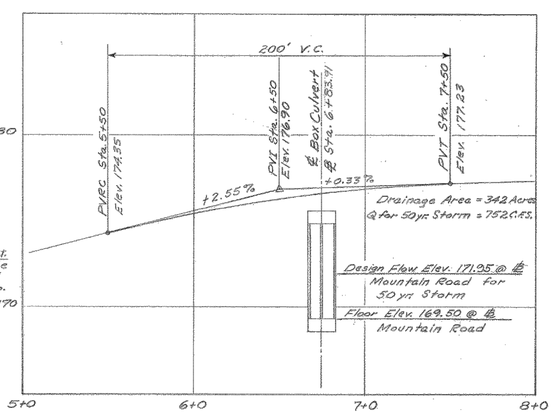

PROFILE OF MOUNTAIN RD.
Scales: Horiz. 1" = 40'
Vert. 1" = 4'

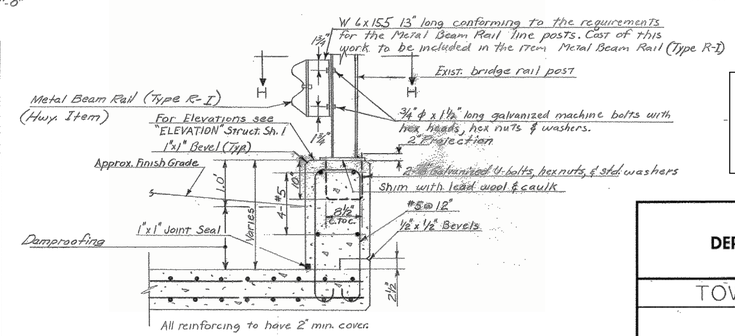

SECTION G-G
Scale 3/4" = 1'

FOR INFORMATIONAL PURPOSES ONLY
NOT TO SCALE

ELEVATIONS BASED ON MDC DATUM

THE INFORMATION, INCLUDING ESTIMATED QUANTITIES OF WORK SHOWN ON THESE SHEETS IS BASED ON LIMITED INVESTIGATIONS BY THE STATE AND IS IN NO WAY WARRANTED TO INDICATE THE TRUE CONDITIONS OR ACTUAL QUANTITIES OR DISTRIBUTION OF QUANTITIES OF WORK WHICH WILL BE REQUIRED.

NO.	DATE	DESCRIPTION

REVISIONS

THIS SHEET NOT REVISED

CONNECTICUT
DEPARTMENT OF TRANSPORTATION
BUREAU OF HIGHWAYS

TOWN OF WEST HARTFORD

MOUNTAIN ROAD
OVER
ALBANY BROOK

BOX CULVERT PLAN

ENGINEER TOWN OF WEST HARTFORD BUREAU OF ENGINEERING
APPROVED DATE
DRAFTSMAN A.B.M. CHECKER R.E.M. DESIGNER J.P.S.
STRUCTURE NO. 155-91-201 STRUCTURE SHEET 1 OF 2

REV.	DATE	REVISION DESCRIPTION	SHEET NO.

Plotted: 03/21/2019

DESIGNER/DRAFTER: G. SOMMER
CHECKED BY: TOWN OF W. HARTFORD
NOT TO SCALE

TOWN OF WEST HARTFORD
DEPARTMENT OF COMMUNITY DEVELOPMENT
DIVISION OF ENGINEERING
50 SOUTH MAIN STREET · ROOM 204 · WEST HARTFORD · CT · 06107

Filename: 01.01_HW_MDS-01_L155_0002

SIGNATURE/BLOCK:
APPROVED BY: DATE:

PROJECT TITLE: MOUNTAIN ROAD AT ALBANY AVENUE (ROUTE 44) INTERSECTION IMPROVEMENTS

TOWN: WEST HARTFORD

DRAWING TITLE: PLANS AND DETAILS EXISTING BOX CULVERT

PROJECT NO. L155-0002
DRAWING NO. MDS-11
SHEET NO. 01.16

Border Version: 10/19/07

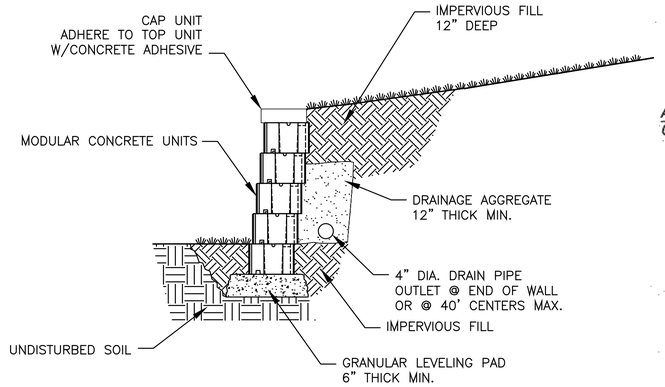

TYPICAL MODULAR BLOCK RETAINING WALL

N.T.S.

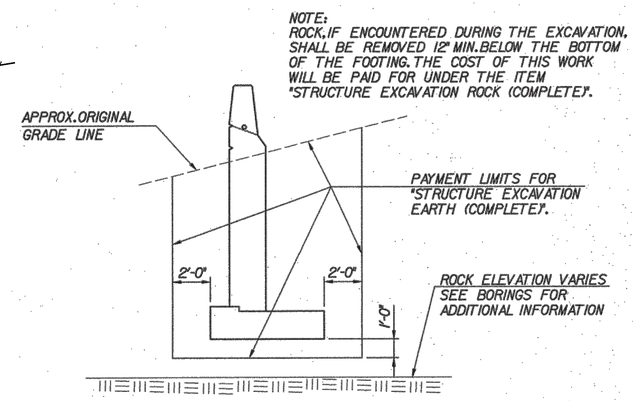

STRUCTURE EXCAVATION PAYMENT LIMITS

N.T.S.

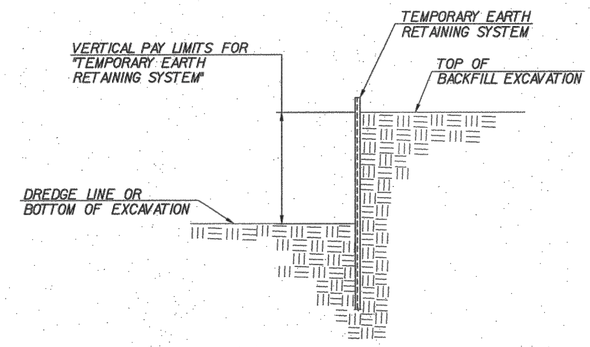

TEMPORARY EARTH RETAINING SYSTEM VERTICAL PAYMENT LIMITS

N.T.S.

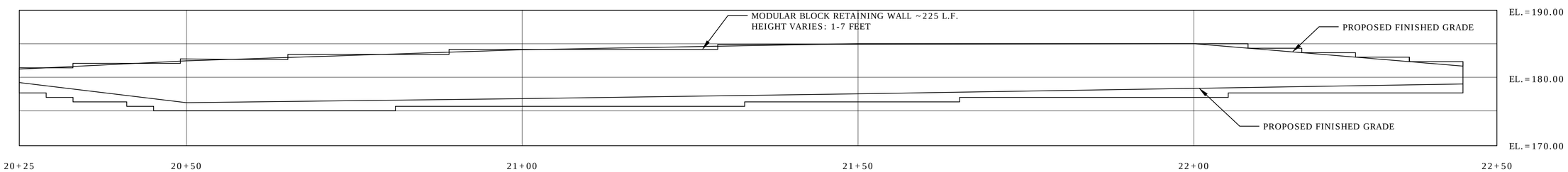

ELEVATION VIEW (RETAINING WALL #1)

STA. 20+25 TO STA. 22+45

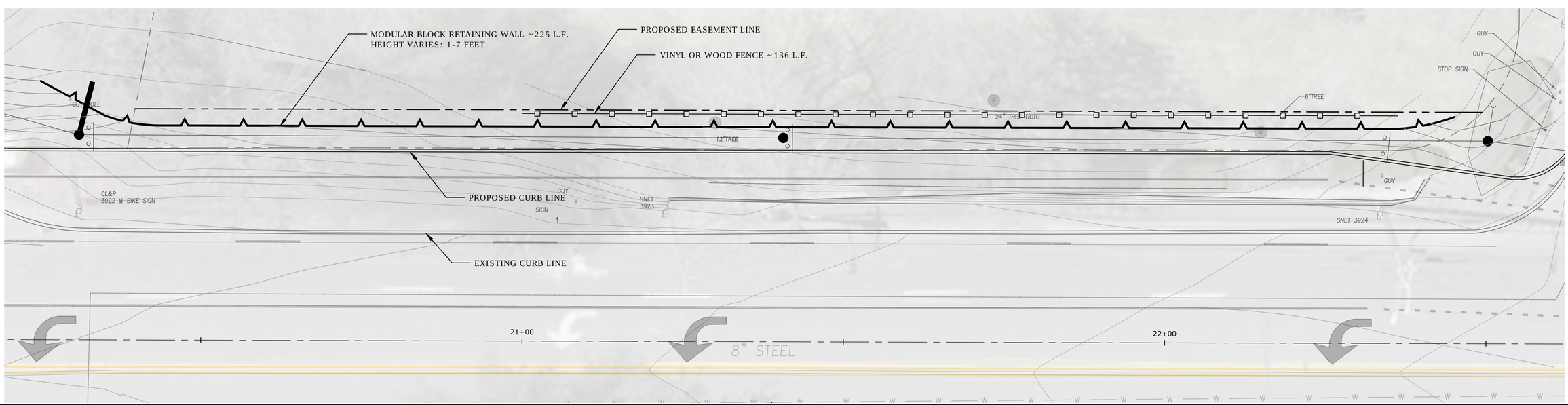

REV.	DATE	REVISION DESCRIPTION	SHEET NO.

Plotted: 03/22/2019

DESIGNER/DRAFTER: G. SOMMER

CHECKED BY: TOWN OF W. HARTFORD

NOT TO SCALE

TOWN OF WEST HARTFORD
DEPARTMENT OF COMMUNITY DEVELOPMENT
DIVISION OF ENGINEERING
50 SOUTH MAIN STREET · ROOM 204 · WEST HARTFORD · CT · 06107

Filename: 01.01_HW_MDS-01_L155_0002

SIGNATURE/BLOCK: -

APPROVED BY: DATE:

PROJECT TITLE: MOUNTAIN ROAD AT ALBANY AVENUE (ROUTE 44) INTERSECTION IMPROVEMENTS

TOWN: WEST HARTFORD

DRAWING TITLE: MISCELLANEOUS DETAILS RETAINING WALL DETAILS

PROJECT NO. L155-0002

DRAWING NO. MDS-12

SHEET NO. 01.17

Border Version: 10/19/07

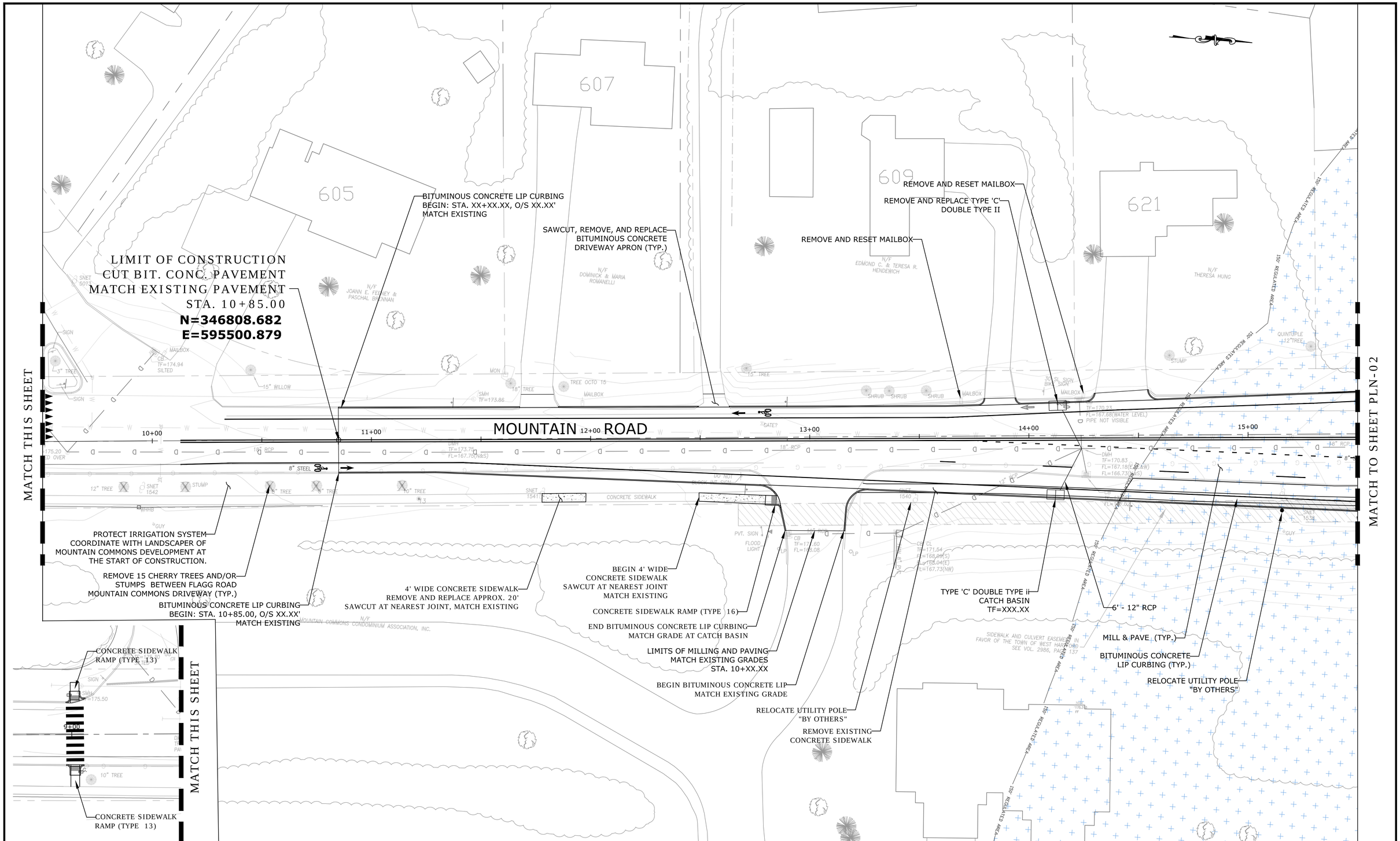

REV.	DATE	REVISION DESCRIPTION	SHEET NO.

Plotted: 03/21/2019

DESIGNER/DRAFTER: G. SOMMER
CHECKED BY: TOWN OF W. HARTFORD
SCALE IN FEET 0 20 40
SCALE 1"=20'

TOWN OF WEST HARTFORD
DEPARTMENT OF COMMUNITY DEVELOPMENT
DIVISION OF ENGINEERING
50 SOUTH MAIN STREET · ROOM 204 · WEST HARTFORD · CT · 06107

Filename:03.01_HW_PLN-01_L155_0002

SIGNATURE/ BLOCK: -
APPROVED BY: DATE:

PROJECT TITLE: MOUNTAIN ROAD AT ALBANY AVENUE (ROUTE 44) INTERSECTION IMPROVEMENTS

TOWN: WEST HARTFORD

DRAWING TITLE: MOUNTAIN ROAD PLAN
STA. 10+00 TO STA. 15+50

PROJECT NO. **L155-0002**
DRAWING NO. PLN-01
SHEET NO. 02.01

Border Version: 10/19/07

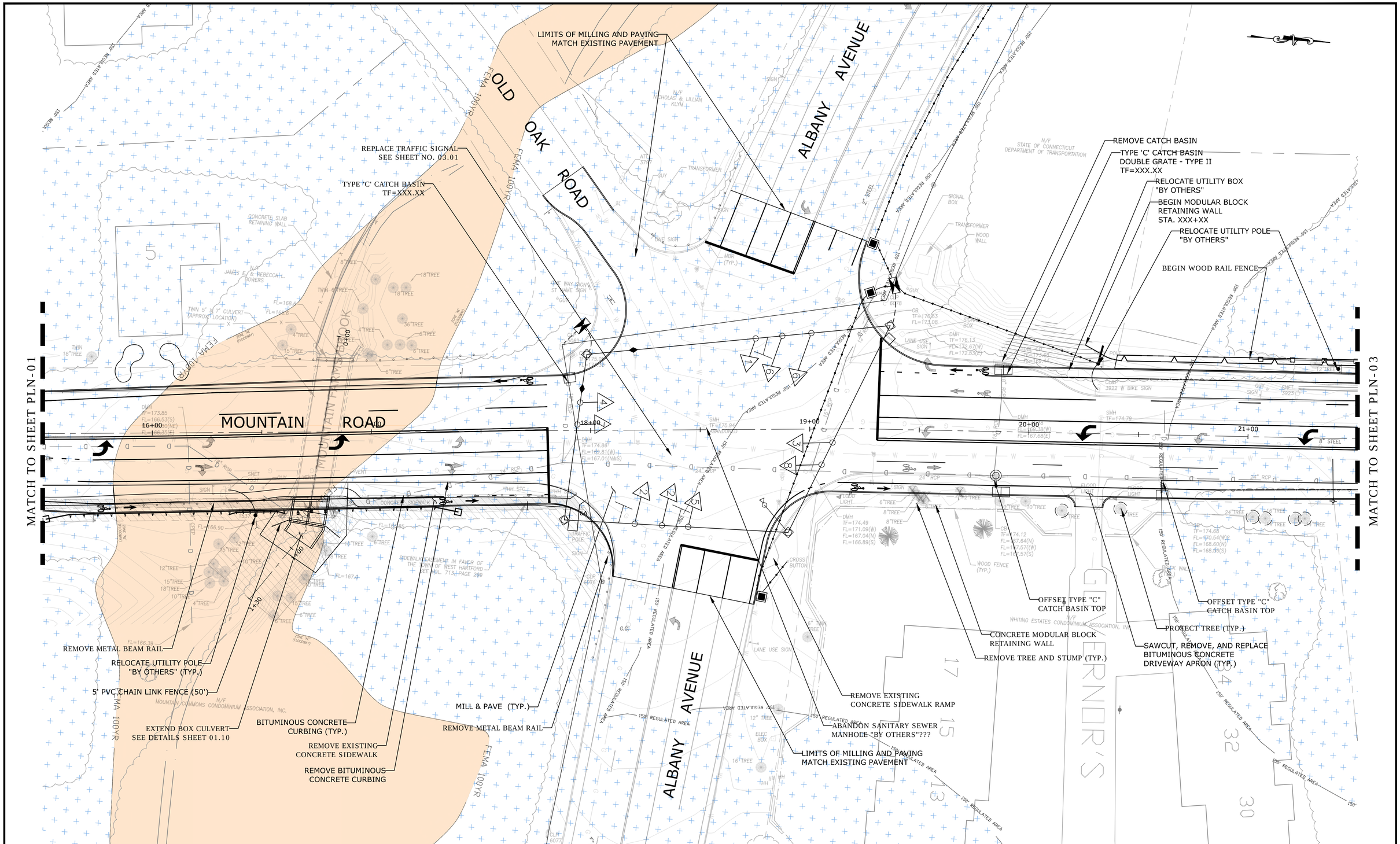

REV.	DATE	REVISION DESCRIPTION	SHEET NO.

Plotted: 03/22/2019

DESIGNER/DRAFTER: G. SOMMER
CHECKED BY: TOWN OF W. HARTFORD
SCALE IN FEET 0 20 40
SCALE 1"=20'

TOWN OF WEST HARTFORD
DEPARTMENT OF COMMUNITY DEVELOPMENT
DIVISION OF ENGINEERING
50 SOUTH MAIN STREET ⊥ ROOM 204 ⊥ WEST HARTFORD ⊥ CT ⊥ 06107

Filename:03.01_HW_PLN-01_L155_0002

SIGNATURE/ BLOCK: -
APPROVED BY: DATE:

PROJECT TITLE: MOUNTAIN ROAD AT ALBANY AVENUE (ROUTE 44) INTERSECTION IMPROVEMENTS

TOWN: WEST HARTFORD

DRAWING TITLE: MOUNTAIN ROAD PLAN
STA. 15+50 TO STA. 21+50

PROJECT NO. **L155-0002**
DRAWING NO. PLN-02
SHEET NO. 02.03

Border Version: 10/19/07

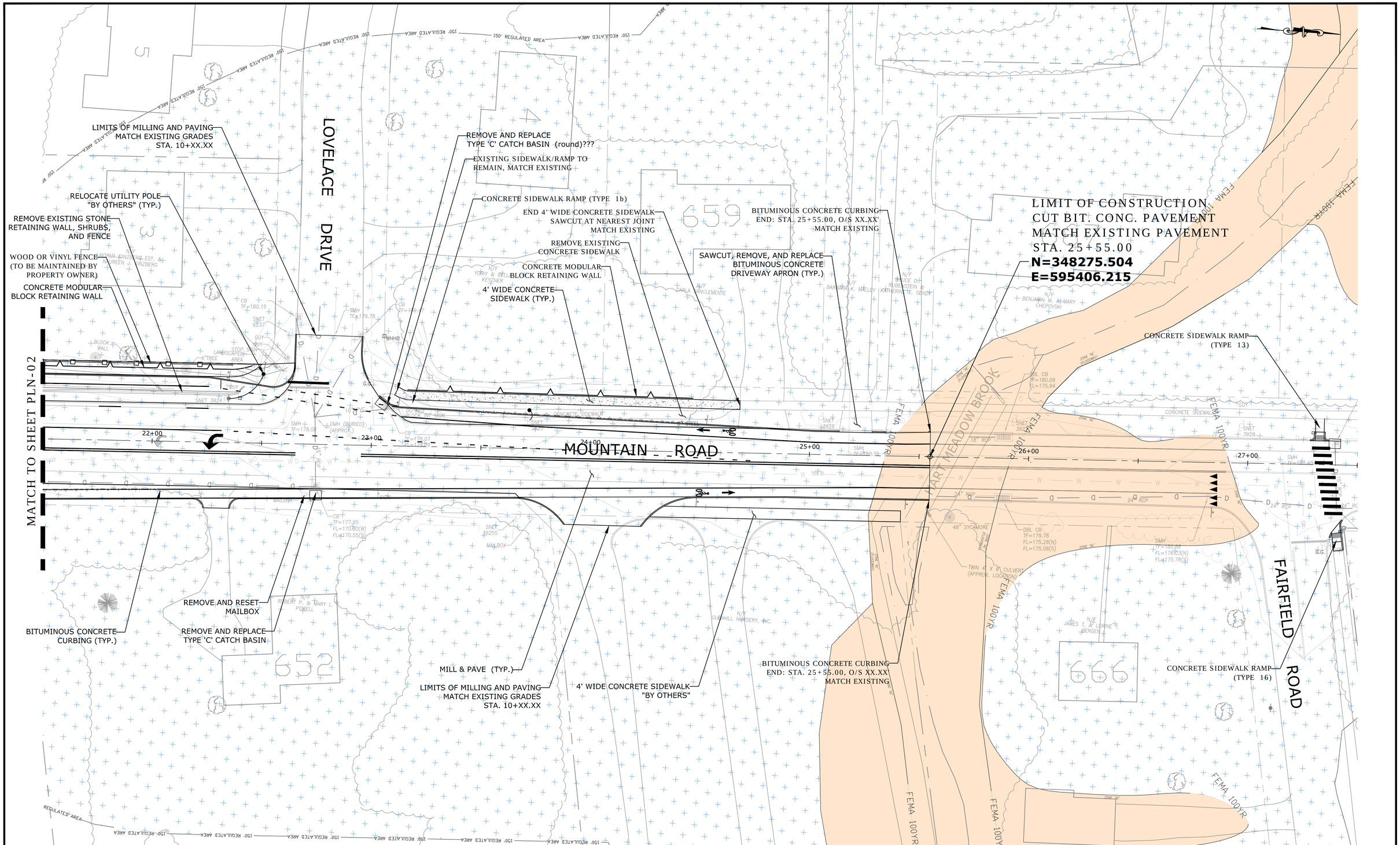

REV.	DATE	REVISION DESCRIPTION	SHEET NO.

Plotted: 03/22/2019

DESIGNER/DRAFTER: G. SOMMER
CHECKED BY: TOWN OF W. HARTFORD
SCALE IN FEET: 0 20 40
SCALE 1"=20'

TOWN OF WEST HARTFORD
DEPARTMENT OF COMMUNITY DEVELOPMENT
DIVISION OF ENGINEERING
50 SOUTH MAIN STREET · ROOM 204 · WEST HARTFORD · CT · 06107

Filename:03.01_HW_PLN-01_L155_0002

SIGNATURE/BLOCK: -
APPROVED BY: DATE:

PROJECT TITLE: MOUNTAIN ROAD AT ALBANY AVENUE (ROUTE 44) INTERSECTION IMPROVEMENTS

TOWN: WEST HARTFORD

DRAWING TITLE: MOUNTAIN ROAD PLAN
STA. 21+50 TO STA. 27+50

PROJECT NO. **L155-0002**
DRAWING NO. PLN-03
SHEET NO. 02.05

Border Version: 10/19/07

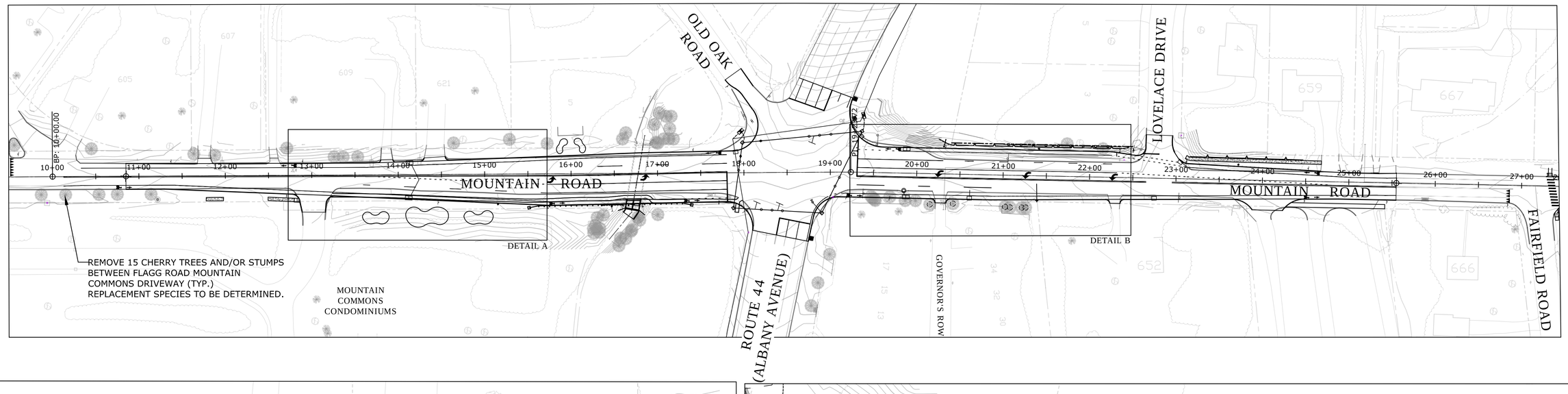

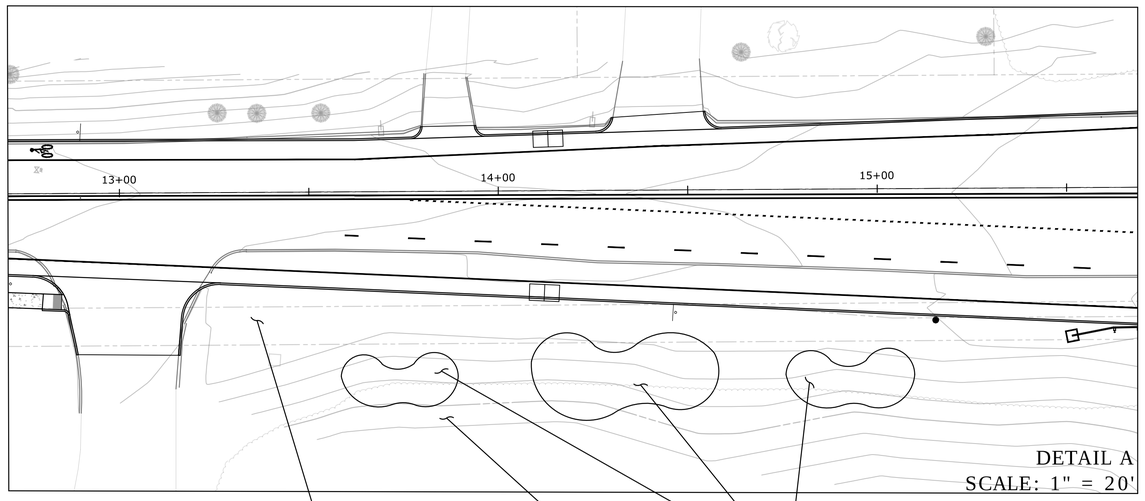

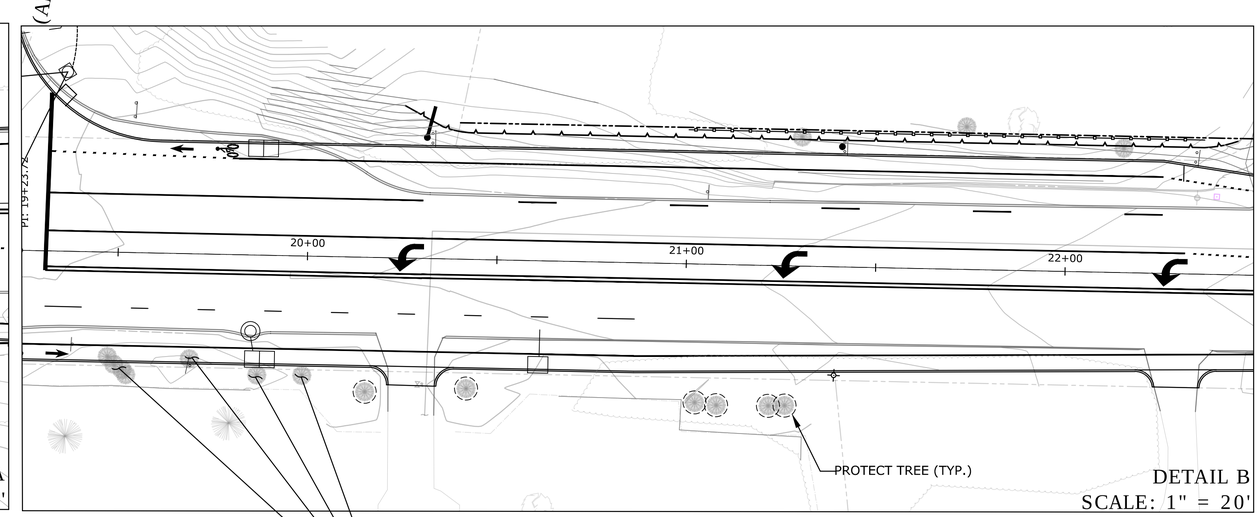

PROTECT IRRIGATION SYSTEM COORDINATE WITH LANDSCAPER OF MOUNTAIN COMMONS DEVELOPMENT AT THE START OF CONSTRUCTION.

SELECTIVE CLEARING TO REMOVE OVERGROWN UNDERBRUSH AND VINES.

PROPOSED EVERGREEN PLANTING AREA. SPECIES, QUANTITIES, AND SIZES TO BE DETERMINED BY THE GREEN MACHINE, INC. LANDSCAPING CONTRACTOR, IN COOPERATION WITH THE TOWN.

REMOVE TREES AND SHRUBS AS NEEDED. REPLACE WITH SAME SPECIES, COORDINATE WORK WITH CONDOMINIUM ASSOCIATION (TYP.)

REV.	DATE	REVISION DESCRIPTION	SHEET NO.

Plotted: 03/22/2019

DESIGNER/DRAFTER: G. SOMMER

CHECKED BY: TOWN OF W. HARTFORD

SCALE IN FEET: 0 60 120

TOWN OF WEST HARTFORD
DEPARTMENT OF COMMUNITY DEVELOPMENT
DIVISION OF ENGINEERING
50 SOUTH MAIN STREET · ROOM 204 · WEST HARTFORD · CT · 06107

Filename:01.01_HW_LDS-01_L155_0002

SIGNATURE/ BLOCK: -

APPROVED BY: DATE:

PROJECT TITLE: MOUNTAIN ROAD AT ALBANY AVENUE (ROUTE 44) INTERSECTION IMPROVEMENTS

TOWN: WEST HARTFORD

DRAWING TITLE: LANDSCAPE PLAN

PROJECT NO. L155-0002

DRAWING NO. LDS-01

SHEET NO. 01.04

Border Version: 10/19/07