TPZ/IWWA Meeting Date: May 2, 2016
Item Number: 2

June 6, 2016
#9

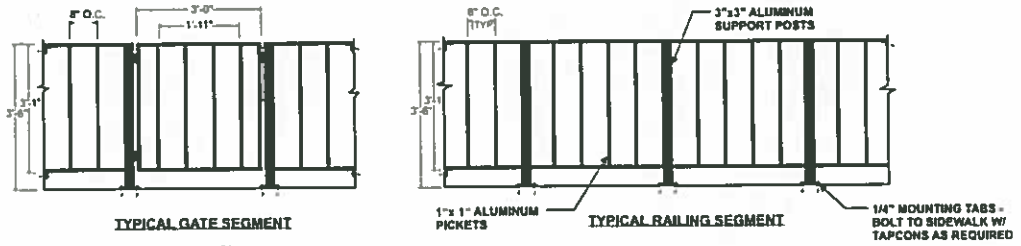

11 PATIO RAILING DETAILS
SCALE: NTS

10 EXAMPLE PATIO SETUP
SCALE: NTS

15" x 6" EXT. WALL SCONCE

9 PATIO LIGHT FIXTURES
SCALE: NTS

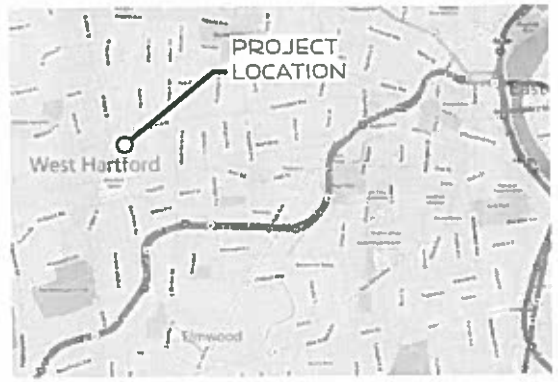

1 BLUE BACK SQUARE - VICINITY MAP
SCALE: NTS

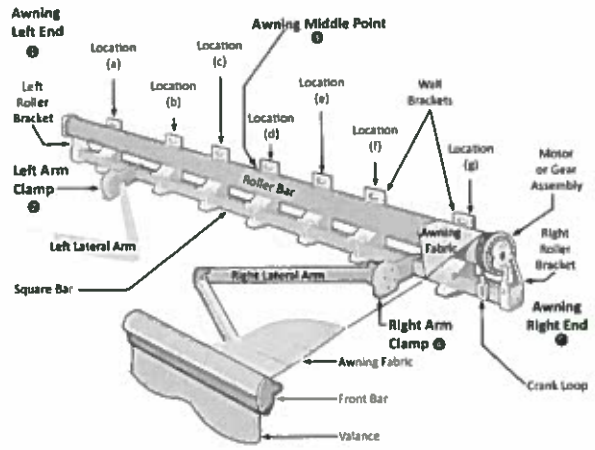

8 RETRACTABLE AWNING DETAILS
SCALE: NTS

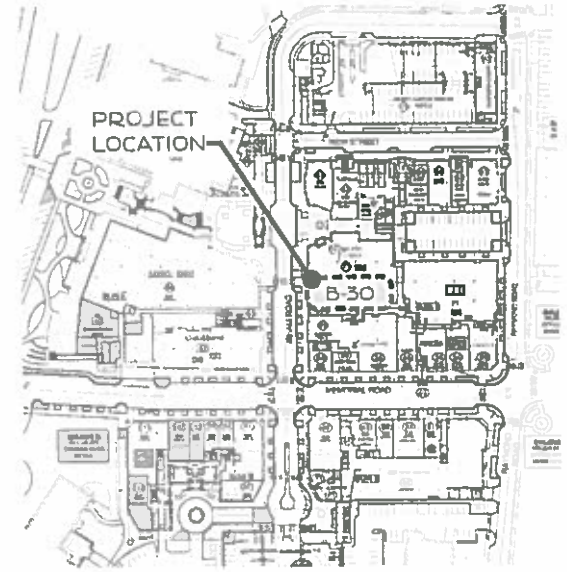

2 BLUE BACK SQUARE - SITE PLAN
SCALE: NTS

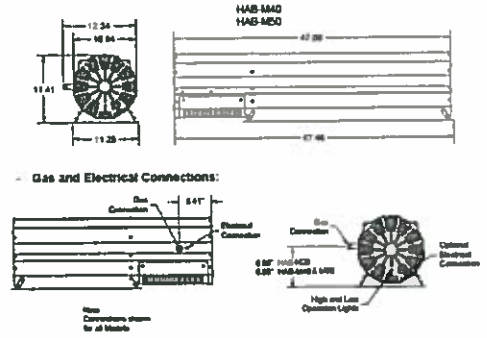

7 WALL MOUNT RADIANT HEATER DETAILS
SCALE: NTS

3 EXISTING EXT. STOREFRONT
SCALE: NTS

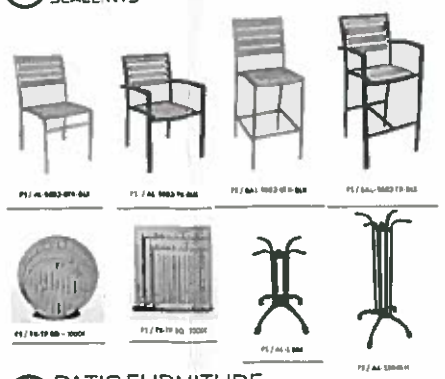

6 PATIO FURNITURE
SCALE: NTS

5 EXISTING EXT. STOREFRONT
SCALE: NTS

4 EXISTING EXT. STOREFRONT
SCALE: NTS

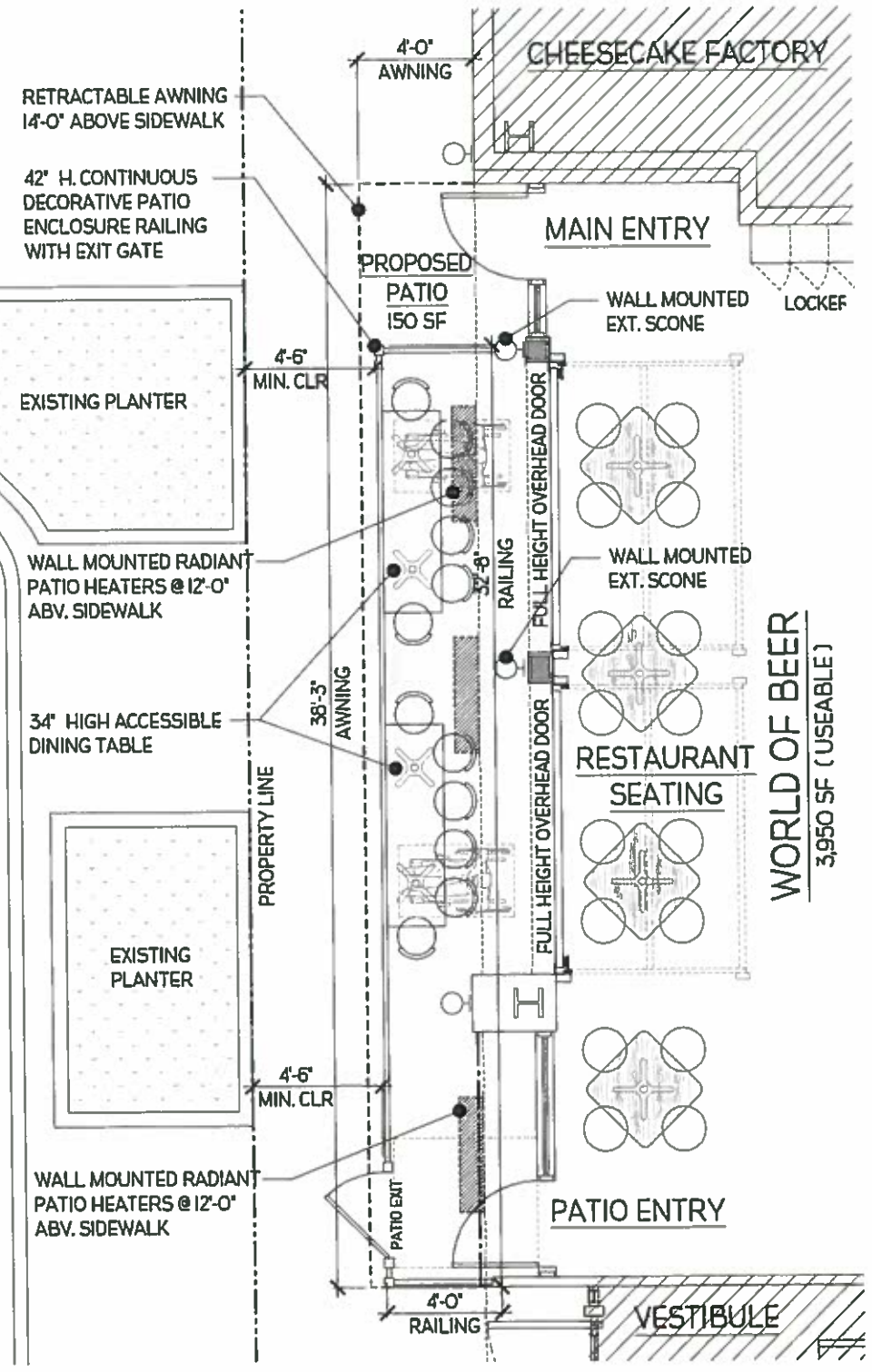

12 WOB OUTDOOR DINING PLAN
SCALE: 1/4" = 1'-0"

slator + associates LLC
14004 ROOSEVELT BLVD. SUITE. 605, CLEARWATER, FLORIDA 33762
tel: 727 280 6681 web: www.slatorassociates.com
AA 26001958

OUTDOOR DINING PLAN

TENANT IMPROVEMENTS FOR:
WOB WORLD OF BEER
WEST HARTFORD, CT 06107
45 MEMORIAL ROAD, SUITE B-30

100%	SPECIAL USE PERMIT
NO. DATE	REVISION
DRAWN BY: JMH	PROJECT NUMBER: 14002
CHECKED: BRS	DATE: 06.23.2014
SHEET NO.	A-010

COPYRIGHT © Slator + Associates LLC. All Rights Reserved

SUP#1254-R1-16