FUSS & O'NEILL

MEMORANDUM

TO: Todd Dumais
Technical Advisory Committee

FROM: Mark G. Vertucci, PE, PTOE
Matthew Skelly, PE

DATE: May 2, 2016

RE: New Park Avenue Transit Area Complete Streets Study
Existing Conditions Technical Memorandum

The New Park Avenue corridor begins in the south at New Britain Avenue and continues north for just over a mile to the Hartford city line. In 2015, the Connecticut Department of Transportation (CT DOT) opened stations for the new bus rapid transit line, CTfastrak, at the intersections of New Park Avenue and New Britain Avenue and New Park Avenue and Flatbush Avenue, just under a mile apart. These two new transit stops have provided the Town of West Hartford with an opportunity to reevaluate the best use of the corridor, especially with respect to Complete Streets design concepts.

Corridor History

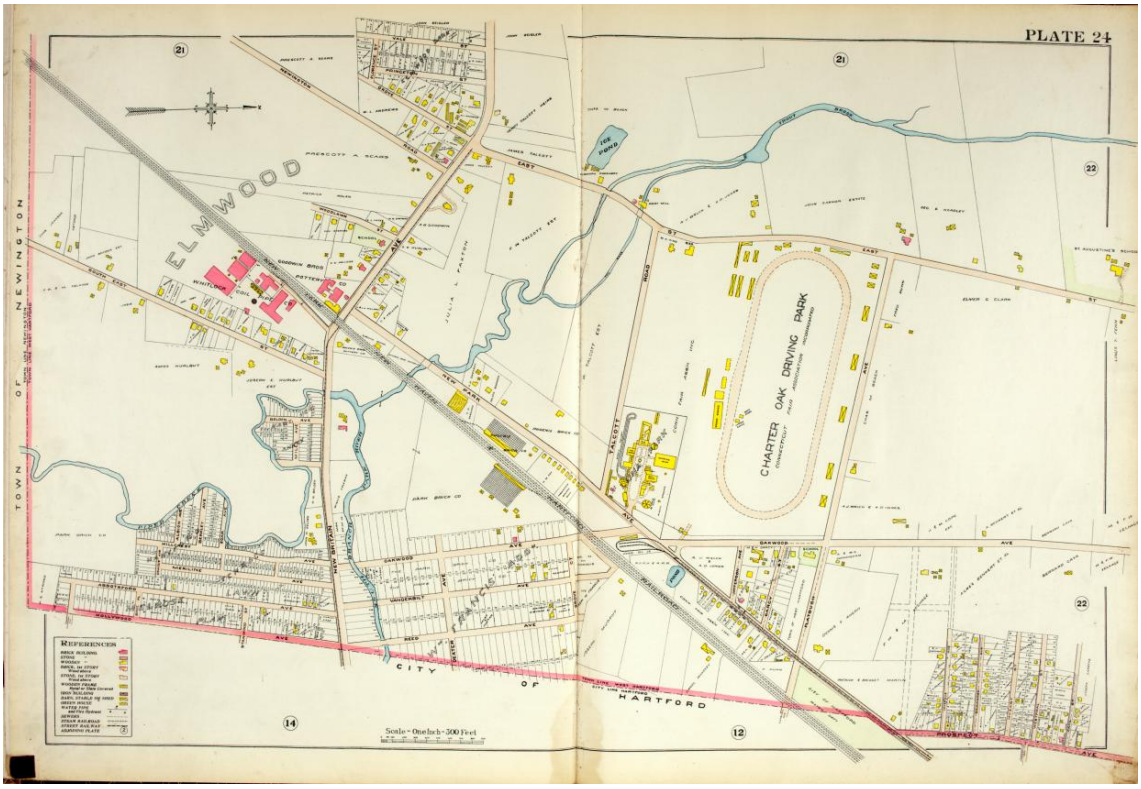

Atlas of the City of Hartford, Connecticut, including, also, the town of West Hartford- L.J. Richards & Company - 1909

New Park Avenue runs parallel to the New Haven – Hartford rail line for the entirety of the roadway, both in West Hartford as well as in Hartford where the roadway terminates at Park Street. The CTfastrak dedicated busway, which runs between the railway and New Park Avenue, is a recent addition to the transit profile in the vicinity of the roadway, which has dominated the area since the late 1800's.

Maps from the early 20th century detail four rail lines running parallel to New Park Avenue, as well as a street railway that terminated just south of the new Flatbush CTfastrak stop. The street railway line connected to lines on Park Street and Farmington Avenue, allowing people from the more populated Hartford area to travel easily and quickly to some of the destinations on New Park Avenue in West Hartford.

Charter Oak Park was a regionally famous location for both vehicle and horse racing and was located along the entirety of the property between what was formerly Oakwood Avenue (now Jefferson Avenue) and East Street (now South Quaker Lane), south of Flatbush Street. In addition to the race track, Luna Park operated across from the end of the street line for a brief period in the early 20th century, drawing crowds in the thousands, primarily via public transit.

In the intervening years the street railway was eliminated and the number of rail lines reduced from four to two as the focus of the corridor became more auto-centric. The Luna Park and Charter Oak Park properties were redeveloped primarily as large industrial land uses and continue to dictate the character of the neighborhood today. The dedication of the corridor to the large scale industrial and vehicular uses runs counter to the human scale development that many post-industrial areas attempt to attain.

Natural Environment

The topography of New Park Avenue in West Hartford is well suited to the railroad it parallels. A small change in elevation is experienced south of Talcott Road on the otherwise flat roadway. Trees are found in areas along the corridor, typically with a caliper of less than one foot. Many businesses are landscaped with low growing shrubs, however it is not uncommon to encounter properties with only paved surface between the building frontage and the sidewalk.

The most prominent environmental feature of the New Park Avenue corridor is Trout Brook, which crosses under New Park Avenue flowing west to east approximately 800 feet north of New Britain Avenue. Trout Brook continues east and joins with Piper Brook to become the south branch of the Park River. Wildlife such as ducks and other birds are regularly observed in the area of Trout Brook, including bald eagles.

Google Earth – Trout Brook under New Park Avenue

Architecture

The building and site design found on the New Park Avenue corridor vary somewhat from property to property. Several properties are developed with one story brick buildings set back from the roadway approximately 40 feet with parking provided on the side and to the rear of the parcel, such as the Holland Kitchens building.

Google Earth – Holland Kitchens

This type of building design is common throughout the corridor, particularly in the section south of Talcott Road. Newer buildings in the southern section, such as the New Park Commons development, have a similar site layout but utilize the area between the building face and the curb line for store front parking.

Google Earth – New Park Commons

In the central portion of the corridor, buildings are typically larger scale and set back further from the roadway. The Raymour and Flanagan Furniture building is set back approximately 120 feet from the roadway and provides the majority of its parking directly between the roadway and the building frontage.

Google Earth – Raymour & Flanigan Furniture

The new CTfastrak stations provide a more current style of architecture and site layout compared to what is found along the rest of the corridor, with wider siderwalks as shown at the Flatbush stop.

Google Earth – Flatbush CTfastrak Stop

Land Use & Zoning

The land in the New Park Avenue corridor was developed primarily with industrial uses prior to the adoption of the state's first zoning ordinance in 1924. The land used for Charter Oak Park housed factories which eventually became home to Pratt and Whitney before its current use by the Colt Manufacturing Company. Historical land further south into Elmwood includes large pottery and brick making businesses.

The zones that govern the New Park Avenue corridor have remained largely unchained since their inception nearly a century ago. While a small portion in the northwest extreme of the corridor is zoned General Business District (BG), the majority of the area is currently zoned as either General Industrial District (IG) or Restricted Industrial District (IR), both of which are defined by the same purpose statement in the Town of West Hartford Zoning Ordinance, Section 177-3. It reads, in part:

> "The purpose of these districts is to provide for the continued coexistence of the residential, commercial and industrial uses while continuing to emphasize that these districts are primarily commercial and industrial in nature. The residential and commercial uses are considered essential to support and serve the industrial uses in these districts as well as in the Industrial Park and Exclusive Industrial Districts, where no residential or commercial uses are permitted. To further these objectives, residential uses are permitted only as a component in development projects which contain a mix of residential and nonresidential uses."

This zoning language has factored into the formation of what is known as the West Hartford Home Design District; a consortium of businesses which all specialize in various aspects of the home design

and improvement field. These businesses can be found throughout the corridor, and compliment the Home Depot store as more individualized shopping experiences.

Visual Assessment

In order to assess the aesthetic quality of the corridor, it is helpful to view the roadway in three distinct character segments. The Flatbush character segment begins at the Hartford city line in the north and ends at Jefferson Avenue in the south. The West Hartford Place character segment continues from Jefferson Avenue south to Talcott Road, and the Elmwood character segment encompasses the southern portion of the corridor from Talcott Road to New Britain Avenue.

Each character segment was qualitatively and quantitatively assessed in terms of aesthetic and design character. The data gathered provide a conscious and or subconscious image of the area about which a perception is formulated. A space which achieves the finest of these qualities will exhibit a uniquely recognizable sense of place. The visual assessment of this corridor is limited to what the driver or the pedestrian on New Park Avenue actually sees.

The Flatbush character segment exhibits strong aesthetic elements in the consistent and updated traffic signal appurtenances, retail businesses built close to the roadway, and the newly developed Flatbush CTfastrak stop. The Flatbush character segment has weak aesthetic elements in the wide roadway sections with the narrow sidewalks and buffers and the notable unused and underused large buildings.

The West Hartford Place character segment displays strong aesthetic elements in its large open green spaces, the small businesses located in the area between Jefferson Avenue and Darcy Street, and the wide buffer with street trees between the roadway and the sidewalk. The weaker aesthetic elements exhibited in the character segment include large "big box" retail stores, barbed wire fence immediately adjacent to the sidewalk and inconsistence and outdated signal appurtenances.

The Elmwood character section exhibits strong aesthetic elements in the Trout Brook and Trout Brook Trail to the west of the corridor, the outdoor patio seating at the Corner Pug restaurant and at the newly constructed Elmwood CTfastrak stop. The segment displays weaker aesthetic elements in the overhead power lines and the large existing undeveloped or underdeveloped properties.

Crash Data

Data from the most recent three years of crash history of the corridor was provided by the West Hartford Police Department and was reviewed for any abnormal type or frequency. *Table 1* summarizes the number of crashes experienced at each distinct location on the corridor.

Table 1 – Crash Data Summary

Roadway Segment/Intersection	2013	2014	2015	Total
Prospect Avenue/ Layton Street	6	4	1	11
Foley Street	5	8	13	26
Flatbush Avenue	9	5	10	24
Jefferson Avenue/ Darcy Street	9	15	10	34
Home Depot/BJ's Parking Lot	11	13	8	32
Oakwood Avenue	3	4	4	11
Talcott Road	5	4	10	19
Between Talcott Road/ New Britain Avenue	14	9	7	30
New Britain Avenue	5	5	10	20
Total	67	67	73	207

The number of crashes experienced in the Home Depot and BJ's parking lot includes one crash experienced at the West Hartford Place driveway intersection with New Park Avenue. The remaining 31 were all reported in the parking lot and the majority involved a backing vehicle.

In the southern section of the corridor, between Talcott Road and New Britain Avenue, a high percentage of the crashes reported were rear-end type crashes. This type of crash is often found more frequently on roadways with relatively high speeds and vehicles slowing to a near stop in order to make a right turn movement. Excessive access points being provided along a roadway can exacerbate this type of crash condition.

The crashes reported are not of a type or frequency uncommon to a roadway of similar character and volume to New Park Avenue.

Access Management

Access management represents a process which allows for safe and efficient access from private properties along a given roadway by minimizing the number and size of conflict points, therefore ensuring the safety of drivers utilizing the roadway. The process balances the needs of property owners to have sufficient access for residents and customers with those of through trips, for which frequent conflict points result in a decrease in efficiency and safety.

As a whole, New Park Avenue has frequent curb cuts due to the large number of commercial and private properties that are accommodated by the Home Design District as well as the many other retail establishments on the corridor. This scenario creates an excessive amount of conflict points along the roadway.

Pedestrian Facilities

Every trip begins and ends on foot, and walking is the least expensive way to get from one place to another. Besides providing direct access to commercial, civic, recreational, academic, and other destinations, good pedestrian facilities are essential to the success of every other travel mode. These facilities include sidewalks of adequate width, visible crosswalks, accessible ramps, pedestrian signals, and a variety of streetscaping measures that also affect comfort and safety. Appropriate lighting, shading, and resting places are important components of the pedestrian experience. Pedestrian routes should be direct and well maintained to aid in walkability.

At the outset of the corridor study, a field assessment of the existence and condition of sidewalk material was conducted and presence of landscaping was noted with the intent of later recommending appropriate facilities for New Park Avenue. Sidewalks are present along the entire length of roadway but consist of a combination of brick, concrete, and asphalt sections that vary in width and condition. Many of these sections are becoming overtaken with vegetation and are adjacent to the edge of pavement creating an unsafe environment for New Park Avenue's travelers. Also, little streetscaping exists along the corridor by means of landscaping or green space between the roadway and buildings.

In addition, a number of intersections are lacking in pedestrian amenities, including accessible ramps, pedestrian countdown timers, and sidewalk connections. At the intersection of New Park Avenue and Talcott Road painted crosswalks are available for pedestrian use; however there is no pedestrian detection and no dedicated pedestrian phase for the traffic signal to permit a crossing.

Bicycle Facilities

Cycling is commonly comparable to walking as an inexpensive way to get from one place to another. Providing the speed of two wheels and the ease of a childhood skill, riding a bicycle is a convenient method of transportation that is both healthy and environmentally friendly. Sharing many of the

aforementioned pedestrian accommodations, bicycle facilities are a crucial aspect of the complete streets experience.

West Hartford is fortunate to have Trout Brook Trail as part of their long-term greenway project. The greenway is popular with bicycle commuters as well as recreational cyclists and joggers. Weekends see especially heavy use of the trail's 1.7 miles, however users often avoid the southern ending of the path at New Park Avenue due to the lack of crosswalk or other facility that would grant cyclists safe access to this section of the corridor or the continuation of the bike facilities to the north and south of New Park Avenue. This disconnect leaves riders with the less than desirable options of riding on sidewalks, joining the traffic on the roadway or crossing the four lanes of vehicular traffic.

Furthermore, the corridor of New Park Avenue lacks any bicycle facilities, including but not limited to road shoulders, bike lanes, shared lanes, pavement markings, bicycle sensitive traffic signals, and bike parking amenities. As a major commercial route in the Home Design District of West Hartford these facilities have the potential to create a safe and enjoyable riding experience for all roadway users.

To the north, New Park Avenue in Hartford provides striped bicycle lanes in the northbound and southbound directions, and to the south a multiuse trail has been constructed along the CTfastrak busway beginning at the Newington Junction Station stop.

Transit Facilities & Service

Approximately one third of the general populace does not possess a driver's license for age, health, financial, legal, or other reasons. To maintain independence and equity among citizens, it is important to facilitate alternative modes of travel beyond a personal vehicle, especially in geographies with dispersed origins and destinations. It is particularly significant that some form of public transportation is available to connect people and places that cannot be easily reached via walking or cycling.

Hartford is an example of a place that historically has not been easily accessible to all residents of the New Park Avenue area however in recent years CT DOT implemented the state's first bus rapid transit system, CT*fastrak*. This integrated bus system utilizes dedicated roadways for the entirety of their trips throughout many of the Hartford suburbs into the capital city.

New Park Avenue recently opened two CT*fastrak* access points, the Elmwood Station at the southern section of the corridor and the Flatbush Station towards the northern limit of the corridor. These stations are compliant with the Americans with Disabilities Act and provide many pedestrian friendly amenities. However neither station provides bicycle parking facilities and has limited vehicle parking spaces based on the daily ridership experienced by the transit system.

The corridor is also accessible via CT Transit to aid the local community in their travels. This is another form of bus service that is owned and operated by CT DOT to serve Hartford and its metropolitan area. CT Transit Hartford operates over thirty local and twelve express bus routes between five and seven

days per week. These buses travel along the shared roadways traveling between twenty six towns in the capital region.

CT Transit Route 153 can be accessed at two locations on New Park Avenue, the Flatbush Avenue Station, and the West Hartford Place Station. Both of these stations are sidewalk stops that provide shelter to riders who wait for the shuttles. Pedestrians are accommodated with ample sidewalk space, adequate lighting as well as a crosswalk and pedestrian friendly signal at the Flatbush Avenue intersection with New Park Avenue. These buses are also equipped with bike racks on their exterior to accommodate cyclists as well as the traveling pedestrian.

Roadway Inventory

The New Park Avenue corridor spans 1.07 miles from the New Britain Avenue intersection in the southwest to the Hartford city line in the northeast. The corridor is comprised of six signalized intersections and four unsignalized intersections of Town owned roadways with New Park Avenue.

The signalized intersection of Prospect Street and New Park Avenue provides northeast and southwestbound approaches on New Park Avenue, a southbound approach on Prospect Street, and a westbound approach from the 430 New Park Avenue driveway. Layton Street also intersects with New Park Avenue immediately south of Prospect Street, however it only provides a travel lane in the westbound direction, away from the intersection. As such, it is not affected by the signalization.

The northeastbound New Park Avenue approach provides a combined left turn/through lane and a combined right turn/through lane and the southwestbound New Park Avenue approach provides a combined left turn/through lane and a channelized right turn lane onto Prospect Avenue. The southbound Prospect Avenue approach provides two right turn lanes, which operate in essence as through lanes, and one left turn lane with 50 feet of vehicle storage capacity. The posted speed limit on Prospect Avenue is 30 miles per hour and the posted speed limit on New Park Avenue is 35 miles per hour.

The unsignalized intersection of Foley Street and New Park Avenue provides northeastbound and southwestbound approaches on New Park Avenue and an eastbound approach on Foley Street. The New Park Avenue approaches both provide two travel lanes in each direction while the Foley Street approach provides one lane. While a fourth leg to this intersection is not located directly across New Park Avenue from Foley Street, access driveways to West Hartford Wine & Liquor and Dunkin' Donuts are located within 20 feet to the north and south, respectively.

The signalized intersection of Flatbush Avenue and New Park Avenue provides northeastbound and southwestbound approaches on New Park Avenue and eastbound and westbound approaches on Flatbush Avenue. The northeastbound and southwestbound New Park Avenue approaches each provide two through lanes and a dedicated left turn lane. The northeastbound left turn lane provides a storage

length of 160 feet and the southwestbound left turn lane provides approximately 250 feet of storage length.

The eastbound Flatbush Avenue approach provides dedicated left turn, through, and right turn lanes, while the westbound Flatbush Avenue approach provides a left turn lane with 50 feet of storage capacity as well as a through lane and a combined through/right turn lane. The posted speed limit on Flatbush Avenue is 25 miles per hour.

Darcy Street and Jefferson Avenue connect to each other and do not provide through access to any other roadways from New Park Avenue. Each intersects with New Park Avenue at an unsignalized intersection and each provides a one lane eastbound approach to the intersection. Dedicated left turn lanes are provided on the New Park Avenue northeastbound approach to each intersection with 50 feet of vehicle storage at Jefferson Avenue and 130 feet of storage at Darcy Street. Both roadways intersect with New Park Avenue opposite an access driveway to the Raymour & Flanigan Furniture/Appletree parking lot.

The sole access driveway to the BJ's Wholesale Club/Home Depot/ALDI development, sometimes referred to as West Hartford Place, meets New Park Avenue across from the southern Raymour & Flanigan/Coastal Tool driveway at a signalized intersection. The northeastbound New Park Avenue approach provides a left turn lane with 300 feet of storage capacity as well as a through lane and a shared through/right turn lane. The southeastbound New Park Avenue approach provides a dedicated left turn lane with approximately 200 feet of storage capacity, a dedicated right turn lane with approximately 250 feet of storage capacity as well as two dedicated through lanes.

The eastbound approach on West Hartford Place provides a left turn lane, a combined left turn/through lane and a right turn lane. The westbound driveway provides a one lane approach to the intersection.

The signalized intersection of Oakwood Avenue and the Colt's Manufacturing Company driveway with New Park Avenue provides northeastbound and southwestbound approaches on New Park Avenue, a northbound approach on Oakwood Avenue and an eastbound approach on the Colt driveway. The northeastbound approach provides a combined left turn/though lane and a combined through/right turn lane while the southwestbound approach provides a left turn lane, a through lane and a combined through/right turn lane.

The northbound Oakwood Avenue approach provides two striped lanes without lane markings which typically function as an exclusive right turn lane and a shared left turn/through lane. The eastbound approach from the Colt driveway provides one lane of travel. The posted speed limit on Oakwood Avenue is 25 miles per hour. It should be noted that a northern portion of Oakwood Avenue also exists, running north from Flatbush Avenue to Park Road, however the section between Flatbush Avenue and New Park Avenue has been discontinued.

The signalized intersection of Talcott Road and New Park Avenue provides northeastbound and southwestbound approaches on New Park Avenue and an eastbound approach on Talcott Road. An access driveway to the Kelly's Salon & Spa property provides a fourth leg to this intersection, however is not controlled by the signal. The northeastbound approach provides a shared left turn/through lane and a dedicated through lane while the southwestbound approach provides a dedicated right turn lane and two through lanes. The eastbound approach provides dedicated left and right turn lanes. The posted speed limit on Talcott Road is 30 miles per hour, and for 700 feet on the western end of the roadway the travel lanes are separate by a planted median measuring 20 feet in width. Gaps in the median are provided to allow access to the Colt Manufacturing Company's access driveways.

The signalized intersection of New Britain Avenue, New Park Avenue and Railroad Place provides northwestbound and southeastbound approaches on New Britain Avenue, a southwestbound approach on New Park Avenue, and a northeastbound approach on Railroad Place offset approximately 65 feet southwest of New Park Avenue. Railroad Place provides no through access to any other Town owned roadways.

The southwestbound New Park Avenue approach provides a dedicated left turn lane and a shared left/right turn lane. The southeastbound New Britain Avenue approach provides a dedicated left turn lane and two through lanes, while the northwestbound approach provides a dedicated right turn lane and two through lanes. The Railroad Place approach provides a one lane approach and is controlled by the signal operations. The posted speed limit on New Britain Avenue is 35 miles per hour.

Traffic Analysis

Capacity and Queue analyses for the signalized study intersections were conducted using Synchro Professional Software, version 9.0.

Capacity Analysis

In discussing intersection capacity analyses results, two terms are used to describe the operating condition of the road or intersection. These two terms are volume to capacity ratio (v/c) and level of service (LOS).

The v/c ratio is a ratio of the volume of traffic using an intersection to the total capacity of the intersection (the maximum number of vehicles that can utilize the intersection during an hour). The v/c ratio can be used to describe the percentage of capacity utilized by a single intersection movement, a combination of movements, an entire intersection approach, or the intersection as a whole.

LOS is a measure of the delay experienced by stopped vehicles at an intersection. LOS is rated on a scale from A to F, with A describing a condition of very low delay (less than 10 seconds per vehicle), and F describing a condition where delays will exceed 80 seconds per vehicle for signalized intersections.

Control delay is the different between the travel time that would have occurred in the absence of the intersection control and the travel time that results because of the presence on the intersection control.

These definitions for v/c ratio and LOS, as well as the methodology for conducting signalized intersection capacity analyses, are taken from the "2000 Highway Capacity Manual" published by the Transportation Research Board.

The attached *Table 2* presents a summary of the levels of service at the following intersections with New Park Avenue:

- Prospect Avenue
- Flatbush Avenue
- West Hartford Place/Raymour & Flanigan Furniture Driveway
- Oakwood Avenue/Colt's Manufacturing Company Driveway
- Talcott Road
- New Britain Avenue/Railroad Place

Copies of the analysis worksheets for the morning and afternoon peak hours are attached. For analysis purposes, the New Park Avenue approaches are referred to as northbound and southbound and the side street approaches are typically referred to as eastbound and westbound. The volumes used for these analyses were primarily collected on Thursday, March 31, 2016 and Saturday, April 2, 2016. Those counts have been attached, as well as a figure depicting a summary of the existing condition volumes.

The intersections of New Park Avenue at Talcott Road, Oakwood Avenue, West Hartford Place and Prospect Avenue all operate efficiently at LOS B or LOS A in the weekday morning, weekday afternoon and Saturday peak hours. The intersection of New Britain Avenue and New Park Avenue operates acceptably at LOS D during the weekday morning and afternoon peak hours and at LOS C during the Saturday peak hour. The intersection of Flatbush Avenue and New Park Avenue operates poorly at LOS E during the weekday morning and Saturday peak hours, and at LOS D during the weekday afternoon peak hour.

Queue Analysis

Background and Combined Condition 95th percentile (design) queue lengths were reviewed at each intersection in the study area. The 95th percentile (design) vehicle queue lengths represent the maximum queue lengths that can be expected at each of the critical approach lanes of the study area intersections. The queue lengths are provided in the Synchro capacity analysis worksheets, which are attached. *Table 3* attached provides a summary of the queue lengths for the critical lanes at each intersection.

The 95th percentile queue lengths experienced along the corridor are contained within the provided storage capacity for the turning movements analyzed with the exception of the following movements:

- Southbound left turn movement at the intersection of Flatbush Avenue and New Park Avenue during the weekday afternoon and Saturday peak hours
- Eastbound left turn lane at the intersection of New Britain Avenue and New Park Avenue during the weekday morning peak hour
- Westbound through movement at the intersection of New Britain Avenue and New Park Avenue during the weekday afternoon peak hour.

Table 2

Existing Condition Signalized Intersection Level of Service Summary
New Park Avenue
West Hartford, Connecticut

	Morning Peak Hour	Afternoon Peak Hour	Saturday Peak Hour
New Park Avenue at New Britain Avenue/Railroad Place	0.80/LOS D/39.1*	0.83/LOS D/40.3*	0.73/LOS C/26.8*
EB Approach	LOS B/13.9	LOS C/20.3	LOS B/13.9
WB Approach	LOS E/67.3	LOS D/54.0	LOS C/67.3
NB Approach	LOS E/63.1	LOS E/67.1	LOS A/63.1
SB Approach	LOS E/55.3	LOS D/45.2	LOS D/55.3
New Park Avenue at Talcott Road	0.46/LOS B/13.4	0.44/LOS B/13.3	0.44/LOS B/13.4
EB Approach	LOS C/33.6	LOS C/31.7	LOS C/32.6
NB Approach	LOS A/7.4	LOS A/7.1	LOS A/7.2
SB Approach	LOS B/12.4	LOS B/13.1	LOS B/13.2
New Park Avenue at Oakwood Avenue/Colt Driveway	0.47/LOS A/8.3	0.57/LOS B/10.2	0.50/LOS A/7.9
EB Approach	LOS B/15.3	LOS C/21.3	LOS C/20.8
WB Approach	LOS B/16.2	LOS C/26.5	LOS C/22.7
NB Approach	LOS A/7.9	LOS A/7.3	LOS A/6.0

SB Approach	LOS A/6.2	LOS A/7.8	LOS A/6.1
New Park Avenue at West Hartford Place/Raymour & Flanigan Driveway	0.45/LOS B/10.5	0.56/LOS B/12.9	0.68/LOS B/13.0
EB Approach	LOS B/14.0	LOS B/17.2	LOS B/14.7
WB Approach	LOS B/15.2	LOS D/45.7	LOS D/39.5
NB Approach	LOS A/8.5	LOS A/8.4	LOS B/10.7
SB Approach	LOS B/11.4	LOS B/13.4	LOS B/13.2
New Park Avenue at Flatbush Avenue	0.77/LOS E/62.6	0.88/LOS D/44.6	0.96/LOS E/64.1
EB Approach	LOS F/194.4	LOS E/61.7	LOS C/32.4
WB Approach	LOS D/40.9	LOS D/53.3	LOS C/22.4
NB Approach	LOS C/26.3	LOS D/44.2	LOS C/25.0
SB Approach	LOS B/16.8	LOS C/28.7	LOS F/166.5
New Park Avenue at Prospect Avenue/490 New Park Avenue Driveway	0.35/LOS B/11.7	0.44/LOS B/14.8	0.40/LOS B/13.8
EB Approach	LOS B/19.0	LOS B/19.4	LOS B/19.1
WB Approach	LOS D/46.2	LOS D/49.1	LOS D/44.2
NB Approach	LOS A/5.8	LOS A/6.1	LOS A/6.0
SB Approach	LOS C/20.7	LOS C/23.7	LOS C/22.9

*Values indicated are intersection max v/c Ratio/LOS/Delay (sec)

Table 3

Existing Condition Queue Length Summary
New Park Avenue Corridor
West Hartford, Connecticut

Intersection	Approach Lane	Morning Peak Hour	Afternoon Peak Hour	Saturday Peak Hour	Storage Length
New Park Avenue at New Britain Avenue/Railroad Place	EB Left Turn	555 Feet	295 Feet	205 Feet	300 Feet
	EB Through	230 Feet	305 Feet	170 Feet	
	WB Through	325 Feet	555 Feet	360 Feet	450 Feet
	WB Right Turn	245 Feet	175 Feet	185 Feet	450 Feet
	NB Approach	0 Feet	0 Feet	0 Feet	
	SB Left Turn	245 Feet	455 Feet	340 Feet	
	SB Through/Right	25 Feet	65 Feet	65 Feet	
New Park Avenue at Talcott Road	EB Left Turn	150 Feet	125 Feet	140 Feet	
	EB Right Turn	20 Feet	30 Feet	30 Feet	
	NB Approach	110 Feet	85 Feet	90 Feet	
	SB Through	85 Feet	185 Feet	160 Feet	
	SB Right Turn	20 Feet	35 Feet	35 Feet	300 Feet
New Park Avenue at Oakwood Avenue/Colt Driveway	EB Approach	0 Feet	15 Feet	0 Feet	
	WB Left/Through	15 Feet	60 Feet	35 Feet	50 Feet
	WB Right Turn	25 Feet	15 Feet	15 Feet	
	NB Approach	145 Feet	95 Feet	105 Feet	
	SB Left Turn	15 Feet	20 Feet	20 Feet	175 Feet
	SB Through/Right	65 Feet	120 Feet	115 Feet	

New Park Avenue at West Hartford Place/Raymour & Flanigan Driveway	EB Left Turn	55 Feet	115 Feet	135 Feet	190 Feet
	EB Through	25 Feet	115 Feet	135 Feet	190 Feet
	EB Right Turn	15 Feet	40 Feet	40 Feet	190 Feet
	WB Approach	0 Feet	25 Feet	25 Feet	
	NB Left Turn	45 Feet	80 Feet	175 Feet	300 Feet
	NB Through/Right	160 Feet	145 Feet	185 Feet	
	SB Left Turn	5 Feet	5 Feet	10 Feet	190 Feet
	SB Through	100 Feet	195 Feet	150 Feet	
	SB Right Turn	10 Feet	15 Feet	15 Feet	250 Feet
New Park Avenue at Flatbush Avenue	EB Left Turn	30 Feet	35 Feet	20 Feet	50 Feet
	EB Through	345 Feet	275 Feet	125 Feet	
	EB Right Turn	20 Feet	55 Feet	50 Feet	
	WB Left Turn	205 Feet	360 Feet	215 Feet	375 Feet
	WB Through	155 Feet	420 Feet	150 Feet	475 Feet
	WB Right Turn	25 Feet	45 Feet	50 Feet	475 Feet
	NB Left Turn	75 Feet	100 Feet	95 Feet	165 Feet
	NB Through/Right	390 Feet	305 Feet	235 Feet	
	SB Left Turn	180 Feet	355 Feet	465 Feet	260 Feet
	SB Left/Through	135 Feet	235 Feet	175 Feet	
New Park Avenue at Prospect Avenue/490 New Park Avenue Driveway	EB Left Turn	10 Feet	30 Feet	25 Feet	50 Feet
	EB Right turn	25 Feet	35 Feet	30 Feet	
	WB Approach	5 Feet	10 Feet	0 Feet	
	NB Approach	130 Feet	155 Feet	140 Feet	
	SB Left/Through	80 Feet	165 Feet	140 Feet	
	SB Right Turn	0 Feet	0 Feet	0 Feet	

Lane Group	EBL	EBT	EBR	WBL	WBT	WBR	NBL	NBT	NBR	SBL	SBT	SBR
Lane Configurations												
Traffic Volume (vph)	512	686	17	0	493	293	4	0	1	234	1	137
Future Volume (vph)	512	686	17	0	493	293	4	0	1	234	1	137
Ideal Flow (vphpl)	1900	1900	1900	1900	1900	1900	1900	1900	1900	1900	1900	1900
Lane Width (ft)	10	10	12	12	12	12	12	12	12	11	12	11
Lane Util. Factor	1.00	0.95	0.95	0.95	0.95	1.00	1.00	1.00	1.00	0.95	0.95	1.00
Frt		0.988				0.850		0.955			0.882	
Flt Protected	0.950							0.968		0.950	0.990	
Satd. Flow (prot)	1652	3211	0	0	3406	1599	0	1756	0	1625	1534	0
Flt Permitted	0.183							0.968		0.950	0.990	
Satd. Flow (perm)	318	3211	0	0	3406	1599	0	1756	0	1625	1534	0
Right Turn on Red			Yes			No			Yes			Yes
Satd. Flow (RTOR)		7						168			143	
Link Speed (mph)		30			30			30			30	
Link Distance (ft)		386			245			138			2131	
Travel Time (s)		8.8			5.6			3.1			48.4	
Peak Hour Factor	0.94	0.93	0.27	0.25	0.87	0.85	0.50	0.25	0.25	0.79	0.25	0.76
Heavy Vehicles (%)	2%	4%	0%	0%	6%	1%	0%	0%	0%	2%	0%	3%
Adj. Flow (vph)	545	738	63	0	567	345	8	0	4	296	4	180
Shared Lane Traffic (%)										15%		
Lane Group Flow (vph)	545	801	0	0	567	345	0	12	0	252	228	0
Turn Type	D.P+P	NA			NA	pt+ov	Split	NA		Split	NA	
Protected Phases	1	1 2			2	2 4	5	5		4	4	
Permitted Phases	2			2								
Detector Phase	1	1 2		2	2	2 4	5	5		4	4	
Switch Phase												
Minimum Initial (s)	5.0			15.0	15.0		5.0	5.0		5.0	5.0	
Minimum Split (s)	9.5			20.5	20.5		9.5	9.5		10.5	10.5	
Total Split (s)	14.0			30.0	30.0		15.0	15.0		41.0	41.0	
Total Split (%)	10.8%			23.1%	23.1%		11.5%	11.5%		31.5%	31.5%	
Maximum Green (s)	9.5			24.5	24.5		10.5	10.5		35.5	35.5	
Yellow Time (s)	3.0			3.0	3.0		3.0	3.0		3.0	3.0	
All-Red Time (s)	1.5			2.5	2.5		1.5	1.5		2.5	2.5	
Lost Time Adjust (s)	0.0				0.0			0.0		0.0	0.0	
Total Lost Time (s)	4.5				5.5			4.5		5.5	5.5	
Lead/Lag	Lead			Lag	Lag					Lag	Lag	
Lead-Lag Optimize?	Yes			Yes	Yes					Yes	Yes	
Vehicle Extension (s)	1.5			2.5	2.5		1.5	1.5		1.5	1.5	
Recall Mode	None			C-Max	C-Max		None	None		None	None	
Walk Time (s)												
Flash Dont Walk (s)												
Pedestrian Calls (#/hr)												
Act Effct Green (s)	86.7	91.2			24.5	55.0		5.0		25.0	25.0	
Actuated g/C Ratio	0.67	0.70			0.19	0.42		0.04		0.19	0.19	
v/c Ratio	0.65	0.36			0.88	0.51		0.05		0.81	0.56	
Control Delay	25.2	9.7			67.9	29.6		0.4		68.8	21.9	
Queue Delay	0.0	0.0			0.0	0.0		0.0		0.0	0.0	
Total Delay	25.2	9.7			67.9	29.6		0.4		68.8	21.9	
LOS	C	A			E	C		A		E	C	

Lane Group	Ø3
Lane Configurations	
Traffic Volume (vph)	
Future Volume (vph)	
Ideal Flow (vphpl)	
Lane Width (ft)	
Lane Util. Factor	
Frt	
Flt Protected	
Satd. Flow (prot)	
Flt Permitted	
Satd. Flow (perm)	
Right Turn on Red	
Satd. Flow (RTOR)	
Link Speed (mph)	
Link Distance (ft)	
Travel Time (s)	
Peak Hour Factor	
Heavy Vehicles (%)	
Adj. Flow (vph)	
Shared Lane Traffic (%)	
Lane Group Flow (vph)	
Turn Type	
Protected Phases	3
Permitted Phases	
Detector Phase	
Switch Phase	
Minimum Initial (s)	7.0
Minimum Split (s)	33.5
Total Split (s)	30.0
Total Split (%)	23%
Maximum Green (s)	22.5
Yellow Time (s)	3.5
All-Red Time (s)	4.0
Lost Time Adjust (s)	
Total Lost Time (s)	
Lead/Lag	Lead
Lead-Lag Optimize?	Yes
Vehicle Extension (s)	3.0
Recall Mode	None
Walk Time (s)	7.0
Flash Dont Walk (s)	19.0
Pedestrian Calls (#/hr)	0
Act Effct Green (s)	
Actuated g/C Ratio	
v/c Ratio	
Control Delay	
Queue Delay	
Total Delay	
LOS	

Lane Group	EBL	EBT	EBR	WBL	WBT	WBR	NBL	NBT	NBR	SBL	SBT	SBR
Approach Delay		16.0			53.4			0.4			46.5	
Approach LOS		B			D			A			D	
Queue Length 50th (ft)	248	111			247	211		0		216	65	
Queue Length 95th (ft)	#555	231			#324	243		0		247	0	
Internal Link Dist (ft)		306			165			58			2051	
Turn Bay Length (ft)												
Base Capacity (vph)	839	2254			641	805		296		443	522	
Starvation Cap Reductn	0	0			0	0		0		0	0	
Spillback Cap Reductn	0	0			0	0		0		0	0	
Storage Cap Reductn	0	0			0	0		0		0	0	
Reduced v/c Ratio	0.65	0.36			0.88	0.43		0.04		0.57	0.44	

Intersection Summary

Area Type: Other
Cycle Length: 130
Actuated Cycle Length: 130
Offset: 24.5 (19%), Referenced to phase 2:EBWB, Start of Yellow
Natural Cycle: 145
Control Type: Actuated-Coordinated
Maximum v/c Ratio: 0.88
Intersection Signal Delay: 33.7 Intersection LOS: C
Intersection Capacity Utilization 65.8% ICU Level of Service C
Analysis Period (min) 15
95th percentile volume exceeds capacity, queue may be longer.
Queue shown is maximum after two cycles.

Splits and Phases: 1: New Park Ave. & New Britain Ave.

Lane Group	Ø3
Approach Delay	
Approach LOS	
Queue Length 50th (ft)	
Queue Length 95th (ft)	
Internal Link Dist (ft)	
Turn Bay Length (ft)	
Base Capacity (vph)	
Starvation Cap Reductn	
Spillback Cap Reductn	
Storage Cap Reductn	
Reduced v/c Ratio	

Intersection Summary

Movement	EBL	EBT	EBR	WBL	WBT	WBR	NBL	NBT	NBR	SBL	SBT	SBR
Lane Configurations												
Traffic Volume (vph)	512	686	17	0	493	293	4	0	1	234	1	137
Future Volume (vph)	512	686	17	0	493	293	4	0	1	234	1	137
Ideal Flow (vphpl)	1900	1900	1900	1900	1900	1900	1900	1900	1900	1900	1900	1900
Lane Width	10	10	12	12	12	12	12	12	12	11	12	11
Total Lost time (s)	4.5	4.5			5.5	5.5		4.5		5.5	5.5	
Lane Util. Factor	1.00	0.95			0.95	1.00		1.00		0.95	0.95	
Frt	1.00	0.99			1.00	0.85		0.95		1.00	0.88	
Flt Protected	0.95	1.00			1.00	1.00		0.97		0.95	0.99	
Satd. Flow (prot)	1652	3211			3406	1599		1756		1625	1534	
Flt Permitted	0.18	1.00			1.00	1.00		0.97		0.95	0.99	
Satd. Flow (perm)	319	3211			3406	1599		1756		1625	1534	
Peak-hour factor, PHF	0.94	0.93	0.27	0.25	0.87	0.85	0.50	0.25	0.25	0.79	0.25	0.76
Adj. Flow (vph)	545	738	63	0	567	345	8	0	4	296	4	180
RTOR Reduction (vph)	0	2	0	0	0	0	0	12	0	0	116	0
Lane Group Flow (vph)	545	799	0	0	567	345	0	0	0	252	113	0
Heavy Vehicles (%)	2%	4%	0%	0%	6%	1%	0%	0%	0%	2%	0%	3%
Turn Type	D.P+P	NA			NA	pt+ov	Split	NA		Split	NA	
Protected Phases	1	1 2			2	2 4	5	5		4	4	
Permitted Phases	2			2								
Actuated Green, G (s)	83.0	87.5			21.8	52.3		2.0		25.0	25.0	
Effective Green, g (s)	83.0	87.5			21.8	52.3		2.0		25.0	25.0	
Actuated g/C Ratio	0.64	0.67			0.17	0.40		0.02		0.19	0.19	
Clearance Time (s)	4.5				5.5			4.5		5.5	5.5	
Vehicle Extension (s)	1.5				2.5			1.5		1.5	1.5	
Lane Grp Cap (vph)	831	2161			571	643		27		312	295	
v/s Ratio Prot	c0.31	0.25			c0.17	0.22		c0.00		c0.16	0.07	
v/s Ratio Perm	0.11											
v/c Ratio	0.66	0.37			0.99	0.54		0.01		0.81	0.38	
Uniform Delay, d1	19.3	9.2			54.0	29.6		63.0		50.2	45.8	
Progression Factor	1.00	1.00			1.00	1.00		1.00		1.00	1.00	
Incremental Delay, d2	1.4	0.0			36.0	0.4		0.0		13.4	0.3	
Delay (s)	20.7	9.3			90.0	30.0		63.1		63.6	46.1	
Level of Service	C	A			F	C		E		E	D	
Approach Delay (s)		13.9			67.3			63.1			55.3	
Approach LOS		B			E			E			E	

Intersection Summary			
HCM 2000 Control Delay	39.1	HCM 2000 Level of Service	D
HCM 2000 Volume to Capacity ratio	0.80		
Actuated Cycle Length (s)	130.0	Sum of lost time (s)	27.5
Intersection Capacity Utilization	65.8%	ICU Level of Service	C
Analysis Period (min)	15		

c Critical Lane Group

Lane Group	EBL	EBR	NBL	NBT	SBT	SBR
Lane Configurations						
Traffic Volume (vph)	153	79	90	696	310	114
Future Volume (vph)	153	79	90	696	310	114
Ideal Flow (vphpl)	1900	1900	1900	1900	1900	1900
Lane Util. Factor	1.00	1.00	0.95	0.95	0.95	1.00
Frt		0.850				0.850
Flt Protected	0.950			0.994		
Satd. Flow (prot)	1770	1599	0	3526	3539	1615
Flt Permitted	0.950			0.856		
Satd. Flow (perm)	1770	1599	0	3037	3539	1615
Right Turn on Red		Yes				Yes
Satd. Flow (RTOR)		113				141
Link Speed (mph)	30			30	30	
Link Distance (ft)	297			639	425	
Travel Time (s)	6.8			14.5	9.7	
Peak Hour Factor	0.89	0.70	0.84	0.91	0.91	0.81
Heavy Vehicles (%)	2%	1%	0%	2%	2%	0%
Adj. Flow (vph)	172	113	107	765	341	141
Shared Lane Traffic (%)						
Lane Group Flow (vph)	172	113	0	872	341	141
Turn Type	Prot	Prot	D.P+P	NA	NA	Perm
Protected Phases	4	4	1	1 2	2	
Permitted Phases			2			2
Detector Phase	4	4	1	1 2	2	2
Switch Phase						
Minimum Initial (s)	8.0	8.0	8.0		30.0	30.0
Minimum Split (s)	14.0	14.0	12.0		36.0	36.0
Total Split (s)	22.0	22.0	19.0		46.0	46.0
Total Split (%)	25.3%	25.3%	21.8%		52.9%	52.9%
Maximum Green (s)	16.0	16.0	15.0		40.0	40.0
Yellow Time (s)	4.0	4.0	3.0		4.0	4.0
All-Red Time (s)	2.0	2.0	1.0		2.0	2.0
Lost Time Adjust (s)	0.0	0.0			0.0	0.0
Total Lost Time (s)	6.0	6.0			6.0	6.0
Lead/Lag			Lead		Lag	Lag
Lead-Lag Optimize?			Yes		Yes	Yes
Vehicle Extension (s)	4.0	4.0	4.0		4.0	4.0
Recall Mode	None	None	None		Max	Max
Act Effct Green (s)	13.5	13.5		55.7	40.1	40.1
Actuated g/C Ratio	0.16	0.16		0.67	0.48	0.48
v/c Ratio	0.60	0.32		0.41	0.20	0.17
Control Delay	41.9	9.1		5.4	13.4	3.1
Queue Delay	0.0	0.0		0.0	0.0	0.0
Total Delay	41.9	9.1		5.4	13.4	3.1
LOS	D	A		A	B	A
Approach Delay	28.9			5.4	10.4	
Approach LOS	C			A	B	
Queue Length 50th (ft)	86	0		78	54	0
Queue Length 95th (ft)	148	21		111	83	22

Lane Group	EBL	EBR	NBL	NBT	SBT	SBR
Internal Link Dist (ft)	217			559	345	
Turn Bay Length (ft)						
Base Capacity (vph)	341	399		2171	1707	851
Starvation Cap Reductn	0	0		0	0	0
Spillback Cap Reductn	0	0		0	0	0
Storage Cap Reductn	0	0		0	0	0
Reduced v/c Ratio	0.50	0.28		0.40	0.20	0.17

Intersection Summary	
Area Type: Other	
Cycle Length: 87	
Actuated Cycle Length: 83.2	
Natural Cycle: 65	
Control Type: Actuated-Uncoordinated	
Maximum v/c Ratio: 0.60	
Intersection Signal Delay: 11.0	Intersection LOS: B
Intersection Capacity Utilization 68.7%	ICU Level of Service C
Analysis Period (min) 15	

Splits and Phases: 2: New Park Ave. & Talcott Rd.

Movement	EBL	EBR	NBL	NBT	SBT	SBR
Lane Configurations						
Traffic Volume (vph)	153	79	90	696	310	114
Future Volume (vph)	153	79	90	696	310	114
Ideal Flow (vphpl)	1900	1900	1900	1900	1900	1900
Total Lost time (s)	6.0	6.0		4.0	6.0	6.0
Lane Util. Factor	1.00	1.00		0.95	0.95	1.00
Frt	1.00	0.85		1.00	1.00	0.85
Flt Protected	0.95	1.00		0.99	1.00	1.00
Satd. Flow (prot)	1770	1599		3526	3539	1615
Flt Permitted	0.95	1.00		0.86	1.00	1.00
Satd. Flow (perm)	1770	1599		3037	3539	1615
Peak-hour factor, PHF	0.89	0.70	0.84	0.91	0.91	0.81
Adj. Flow (vph)	172	113	107	765	341	141
RTOR Reduction (vph)	0	95	0	0	0	73
Lane Group Flow (vph)	172	18	0	872	341	68
Heavy Vehicles (%)	2%	1%	0%	2%	2%	0%
Turn Type	Prot	Prot	D.P+P	NA	NA	Perm
Protected Phases	4	4	1	1 2	2	
Permitted Phases			2			2
Actuated Green, G (s)	13.5	13.5		53.6	40.1	40.1
Effective Green, g (s)	13.5	13.5		53.6	40.1	40.1
Actuated g/C Ratio	0.16	0.16		0.65	0.48	0.48
Clearance Time (s)	6.0	6.0			6.0	6.0
Vehicle Extension (s)	4.0	4.0			4.0	4.0
Lane Grp Cap (vph)	287	259		2038	1707	779
v/s Ratio Prot	c0.10	0.01		c0.07	0.10	
v/s Ratio Perm				c0.21		0.04
v/c Ratio	0.60	0.07		0.43	0.20	0.09
Uniform Delay, d1	32.3	29.5		7.2	12.3	11.6
Progression Factor	1.00	1.00		1.00	1.00	1.00
Incremental Delay, d2	3.9	0.2		0.2	0.3	0.2
Delay (s)	36.2	29.6		7.4	12.6	11.8
Level of Service	D	C		A	B	B
Approach Delay (s)	33.6			7.4	12.4	
Approach LOS	C			A	B	

Intersection Summary			
HCM 2000 Control Delay	13.4	HCM 2000 Level of Service	B
HCM 2000 Volume to Capacity ratio	0.46		
Actuated Cycle Length (s)	83.1	Sum of lost time (s)	16.0
Intersection Capacity Utilization	68.7%	ICU Level of Service	C
Analysis Period (min)	15		
c Critical Lane Group			

Lane Group	EBL	EBT	EBR	WBL	WBT	WBR	NBL	NBT	NBR	SBL	SBT	SBR
Lane Configurations												
Traffic Volume (vph)	3	0	6	59	0	85	9	737	92	57	378	23
Future Volume (vph)	3	0	6	59	0	85	9	737	92	57	378	23
Ideal Flow (vphpl)	1900	1900	1900	1900	1900	1900	1900	1900	1900	1900	1900	1900
Storage Length (ft)	0		0	0		0	0		0	249		0
Storage Lanes	0		0	0		1	0		0	1		0
Taper Length (ft)	25			25			25			25		
Lane Util. Factor	1.00	1.00	1.00	1.00	1.00	1.00	0.95	0.95	0.95	1.00	0.95	0.95
Frt		0.904				0.850		0.982			0.985	
Flt Protected		0.986			0.950			0.999		0.950		
Satd. Flow (prot)	0	1694	0	0	1719	1553	0	3495	0	1736	3524	0
Flt Permitted		0.908			0.739			0.945		0.258		
Satd. Flow (perm)	0	1560	0	0	1337	1553	0	3306	0	471	3524	0
Right Turn on Red			Yes			Yes			Yes			Yes
Satd. Flow (RTOR)		92				108		36			28	
Link Speed (mph)		30			30			30			30	
Link Distance (ft)		156			393			425			656	
Travel Time (s)		3.5			8.9			9.7			14.9	
Peak Hour Factor	0.38	0.25	0.30	0.87	0.25	0.79	0.56	0.94	0.85	0.79	0.86	0.48
Heavy Vehicles (%)	0%	0%	0%	5%	0%	4%	0%	1%	4%	4%	1%	0%
Adj. Flow (vph)	8	0	20	68	0	108	16	784	108	72	440	48
Shared Lane Traffic (%)												
Lane Group Flow (vph)	0	28	0	0	68	108	0	908	0	72	488	0
Turn Type	Perm	NA		Perm	NA	Perm	Perm	NA		pm+pt	NA	
Protected Phases		4			4			2		1	2	
Permitted Phases	4			4		4	2			2		
Detector Phase	4	4		4	4	4	2	2		1	2	
Switch Phase												
Minimum Initial (s)	8.0	8.0		8.0	8.0	8.0	8.0	8.0		5.0	8.0	
Minimum Split (s)	12.0	12.0		12.0	12.0	12.0	12.0	12.0		9.5	12.0	
Total Split (s)	16.0	16.0		16.0	16.0	16.0	40.0	40.0		9.5	40.0	
Total Split (%)	24.4%	24.4%		24.4%	24.4%	24.4%	61.1%	61.1%		14.5%	61.1%	
Maximum Green (s)	12.0	12.0		12.0	12.0	12.0	36.0	36.0		5.0	36.0	
Yellow Time (s)	3.0	3.0		3.0	3.0	3.0	3.0	3.0		3.5	3.0	
All-Red Time (s)	1.0	1.0		1.0	1.0	1.0	1.0	1.0		1.0	1.0	
Lost Time Adjust (s)		0.0			0.0	0.0		0.0		0.0	0.0	
Total Lost Time (s)		4.0			4.0	4.0		4.0		4.5	4.0	
Lead/Lag							Lag	Lag		Lead	Lag	
Lead-Lag Optimize?							Yes	Yes		Yes	Yes	
Vehicle Extension (s)	4.0	4.0		4.0	4.0	4.0	4.0	4.0		3.0	4.0	
Recall Mode	None	None		None	None	None	None	None		None	None	
Act Effct Green (s)		12.1			12.1	12.1		23.9		22.9	23.9	
Actuated g/C Ratio		0.30			0.30	0.30		0.58		0.56	0.58	
v/c Ratio		0.05			0.17	0.20		0.47		0.15	0.24	
Control Delay		0.2			20.3	6.6		8.8		4.5	7.0	
Queue Delay		0.0			0.0	0.0		0.0		0.0	0.0	
Total Delay		0.2			20.3	6.6		8.8		4.5	7.0	
LOS		A			C	A		A		A	A	
Approach Delay		0.2			11.9			8.8			6.7	

Lane Group	EBL	EBT	EBR	WBL	WBT	WBR	NBL	NBT	NBR	SBL	SBT	SBR
Approach LOS		A			B			A			A	
Queue Length 50th (ft)		0			16	0		87		6	38	
Queue Length 95th (ft)		0			14	26		146		16	65	
Internal Link Dist (ft)		76			313			345			576	
Turn Bay Length (ft)										249		
Base Capacity (vph)		690			545	697		2669		478	2843	
Starvation Cap Reductn		0			0	0		0		0	0	
Spillback Cap Reductn		0			0	0		0		0	0	
Storage Cap Reductn		0			0	0		0		0	0	
Reduced v/c Ratio		0.04			0.12	0.15		0.34		0.15	0.17	

Intersection Summary

Area Type: Other
Cycle Length: 65.5
Actuated Cycle Length: 41
Natural Cycle: 40
Control Type: Actuated-Uncoordinated
Maximum v/c Ratio: 0.47
Intersection Signal Delay: 8.3 Intersection LOS: A
Intersection Capacity Utilization 52.9% ICU Level of Service A
Analysis Period (min) 15

Splits and Phases: 3: New Park Ave. & Colt Dr./Oakwood Ave.

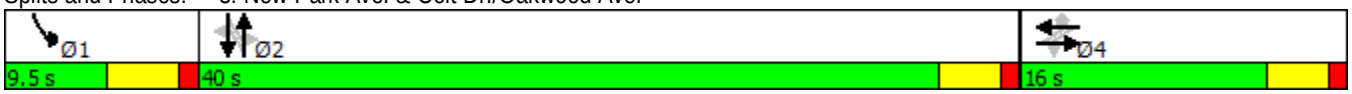

Movement	EBL	EBT	EBR	WBL	WBT	WBR	NBL	NBT	NBR	SBL	SBT	SBR
Lane Configurations												
Traffic Volume (vph)	3	0	6	59	0	85	9	737	92	57	378	23
Future Volume (vph)	3	0	6	59	0	85	9	737	92	57	378	23
Ideal Flow (vphpl)	1900	1900	1900	1900	1900	1900	1900	1900	1900	1900	1900	1900
Total Lost time (s)		4.0			4.0	4.0		4.0		4.5	4.0	
Lane Util. Factor		1.00			1.00	1.00		0.95		1.00	0.95	
Frt		0.90			1.00	0.85		0.98		1.00	0.99	
Flt Protected		0.99			0.95	1.00		1.00		0.95	1.00	
Satd. Flow (prot)		1693			1719	1553		3496		1736	3525	
Flt Permitted		0.91			0.74	1.00		0.95		0.26	1.00	
Satd. Flow (perm)		1558			1337	1553		3307		471	3525	
Peak-hour factor, PHF	0.38	0.25	0.30	0.87	0.25	0.79	0.56	0.94	0.85	0.79	0.86	0.48
Adj. Flow (vph)	8	0	20	68	0	108	16	784	108	72	440	48
RTOR Reduction (vph)	0	24	0	0	0	91	0	18	0	0	14	0
Lane Group Flow (vph)	0	4	0	0	68	17	0	890	0	72	474	0
Heavy Vehicles (%)	0%	0%	0%	5%	0%	4%	0%	1%	4%	4%	1%	0%
Turn Type	Perm	NA		Perm	NA	Perm	Perm	NA		pm+pt	NA	
Protected Phases		4			4			2		1	2	
Permitted Phases	4			4		4	2			2		
Actuated Green, G (s)		6.8			6.8	6.8		21.3		23.6	21.3	
Effective Green, g (s)		6.8			6.8	6.8		21.3		23.6	21.3	
Actuated g/C Ratio		0.16			0.16	0.16		0.50		0.55	0.50	
Clearance Time (s)		4.0			4.0	4.0		4.0		4.5	4.0	
Vehicle Extension (s)		4.0			4.0	4.0		4.0		3.0	4.0	
Lane Grp Cap (vph)		246			211	246		1641		326	1750	
v/s Ratio Prot										c0.01	0.13	
v/s Ratio Perm		0.00			c0.05	0.01		c0.27		0.11		
v/c Ratio		0.02			0.32	0.07		0.54		0.22	0.27	
Uniform Delay, d1		15.2			16.0	15.4		7.4		4.7	6.3	
Progression Factor		1.00			1.00	1.00		1.00		1.00	1.00	
Incremental Delay, d2		0.0			1.2	0.2		0.5		0.3	0.1	
Delay (s)		15.3			17.2	15.5		7.9		5.1	6.4	
Level of Service		B			B	B		A		A	A	
Approach Delay (s)		15.3			16.2			7.9			6.2	
Approach LOS		B			B			A			A	

Intersection Summary			
HCM 2000 Control Delay	8.3	HCM 2000 Level of Service	A
HCM 2000 Volume to Capacity ratio	0.47		
Actuated Cycle Length (s)	42.9	Sum of lost time (s)	12.5
Intersection Capacity Utilization	52.9%	ICU Level of Service	A
Analysis Period (min)	15		
c Critical Lane Group			

Lane Group	EBL	EBT	EBR	WBL	WBT	WBR	NBL	NBT	NBR	SBL	SBT	SBR
Lane Configurations												
Traffic Volume (vph)	144	3	80	2	1	3	115	651	4	4	387	172
Future Volume (vph)	144	3	80	2	1	3	115	651	4	4	387	172
Ideal Flow (vphpl)	1900	1900	1900	1900	1900	1900	1900	1900	1900	1900	1900	1900
Storage Length (ft)	0		0	0		0	315		0	200		0
Storage Lanes	1		1	0		0	1		0	1		1
Taper Length (ft)	25			25			25			25		
Lane Util. Factor	0.95	0.95	1.00	1.00	1.00	1.00	1.00	0.95	0.95	1.00	0.95	1.00
Frt			0.850		0.932			0.997				0.850
Flt Protected	0.950	0.956			0.988		0.950			0.950		
Satd. Flow (prot)	1649	1664	1553	0	1750	0	1770	3530	0	1805	3574	1568
Flt Permitted	0.950	0.956			0.936		0.374			0.384		
Satd. Flow (perm)	1649	1664	1553	0	1657	0	697	3530	0	730	3574	1568
Right Turn on Red			Yes			Yes			Yes			Yes
Satd. Flow (RTOR)			108		8			1				205
Link Speed (mph)		30			30			30			30	
Link Distance (ft)		189			135			656			375	
Travel Time (s)		4.3			3.1			14.9			8.5	
Peak Hour Factor	0.78	0.38	0.80	0.50	0.25	0.38	0.78	0.94	0.33	1.00	0.93	0.84
Heavy Vehicles (%)	4%	0%	4%	0%	0%	0%	2%	2%	0%	0%	1%	3%
Adj. Flow (vph)	185	8	100	4	4	8	147	693	12	4	416	205
Shared Lane Traffic (%)	48%											
Lane Group Flow (vph)	96	97	100	0	16	0	147	705	0	4	416	205
Turn Type	Split	NA	pt+ov	Split	NA		pm+pt	NA		pm+pt	NA	pt+ov
Protected Phases	8!	8	8 1	7	7		1	6		5	2	2 8!
Permitted Phases					8!		6			2		
Detector Phase	8	8	8 1	7	7		1	6		5	2	2 8
Switch Phase												
Minimum Initial (s)	6.0	6.0		4.0	4.0		4.0	4.0		6.0	6.0	
Minimum Split (s)	10.0	10.0		8.0	8.0		8.0	8.0		10.0	10.0	
Total Split (s)	29.0	29.0		14.0	14.0		14.0	14.0		29.0	29.0	
Total Split (%)	26.1%	26.1%		12.6%	12.6%		12.6%	12.6%		26.1%	26.1%	
Maximum Green (s)	25.0	25.0		10.0	10.0		10.0	10.0		25.0	25.0	
Yellow Time (s)	3.0	3.0		3.0	3.0		3.0	3.0		3.0	3.0	
All-Red Time (s)	1.0	1.0		1.0	1.0		1.0	1.0		1.0	1.0	
Lost Time Adjust (s)	0.0	0.0			0.0		0.0	0.0		0.0	0.0	
Total Lost Time (s)	4.0	4.0			4.0		4.0	4.0		4.0	4.0	
Lead/Lag	Lag	Lag		Lead	Lead		Lead	Lag		Lead	Lag	
Lead-Lag Optimize?	Yes	Yes		Yes	Yes		Yes	Yes		Yes	Yes	
Vehicle Extension (s)	3.0	3.0		3.0	3.0		3.0	3.0		3.0	3.0	
Recall Mode	None	None		None	None		None	None		None	None	
Walk Time (s)												
Flash Dont Walk (s)												
Pedestrian Calls (#/hr)												
Act Effct Green (s)	7.9	7.9	20.1		8.7		21.7	20.3		15.8	9.5	21.1
Actuated g/C Ratio	0.20	0.20	0.51		0.22		0.55	0.52		0.40	0.24	0.54
v/c Ratio	0.29	0.29	0.12		0.04		0.24	0.39		0.01	0.48	0.22
Control Delay	18.3	18.3	2.5		9.7		6.7	8.8		6.5	16.0	1.5
Queue Delay	0.0	0.0	0.0		0.0		0.0	0.0		0.0	0.0	0.0

Lane Group	Ø3
Lane Configurations	
Traffic Volume (vph)	
Future Volume (vph)	
Ideal Flow (vphpl)	
Storage Length (ft)	
Storage Lanes	
Taper Length (ft)	
Lane Util. Factor	
Frt	
Flt Protected	
Satd. Flow (prot)	
Flt Permitted	
Satd. Flow (perm)	
Right Turn on Red	
Satd. Flow (RTOR)	
Link Speed (mph)	
Link Distance (ft)	
Travel Time (s)	
Peak Hour Factor	
Heavy Vehicles (%)	
Adj. Flow (vph)	
Shared Lane Traffic (%)	
Lane Group Flow (vph)	
Turn Type	
Protected Phases	3
Permitted Phases	
Detector Phase	
Switch Phase	
Minimum Initial (s)	4.0
Minimum Split (s)	19.0
Total Split (s)	25.0
Total Split (%)	23%
Maximum Green (s)	23.0
Yellow Time (s)	2.0
All-Red Time (s)	0.0
Lost Time Adjust (s)	
Total Lost Time (s)	
Lead/Lag	
Lead-Lag Optimize?	
Vehicle Extension (s)	3.0
Recall Mode	None
Walk Time (s)	4.0
Flash Dont Walk (s)	21.0
Pedestrian Calls (#/hr)	0
Act Effct Green (s)	
Actuated g/C Ratio	
v/c Ratio	
Control Delay	
Queue Delay	

Lane Group	EBL	EBT	EBR	WBL	WBT	WBR	NBL	NBT	NBR	SBL	SBT	SBR
Total Delay	18.3	18.3	2.5		9.7		6.7	8.8		6.5	16.0	1.5
LOS	B	B	A		A		A	A		A	B	A
Approach Delay		12.9			9.7			8.4			11.2	
Approach LOS		B			A			A			B	
Queue Length 50th (ft)	15	16	0		1		10	28		0	34	0
Queue Length 95th (ft)	56	26	15		2		46	160		5	102	11
Internal Link Dist (ft)		109			55			576			295	
Turn Bay Length (ft)							315			200		
Base Capacity (vph)	1105	1115	1081		542		671	1822		1218	2396	1523
Starvation Cap Reductn	0	0	0		0		0	0		0	0	0
Spillback Cap Reductn	0	0	0		0		0	0		0	0	0
Storage Cap Reductn	0	0	0		0		0	0		0	0	0
Reduced v/c Ratio	0.09	0.09	0.09		0.03		0.22	0.39		0.00	0.17	0.13

Intersection Summary	
Area Type: Other	
Cycle Length: 111	
Actuated Cycle Length: 39.4	
Natural Cycle: 65	
Control Type: Actuated-Uncoordinated	
Maximum v/c Ratio: 0.48	
Intersection Signal Delay: 10.1	Intersection LOS: B
Intersection Capacity Utilization 43.1%	ICU Level of Service A
Analysis Period (min) 15	

! Phase conflict between lane groups.

Splits and Phases: 4: New Park Ave. & West Hartford Place/Private Dr.

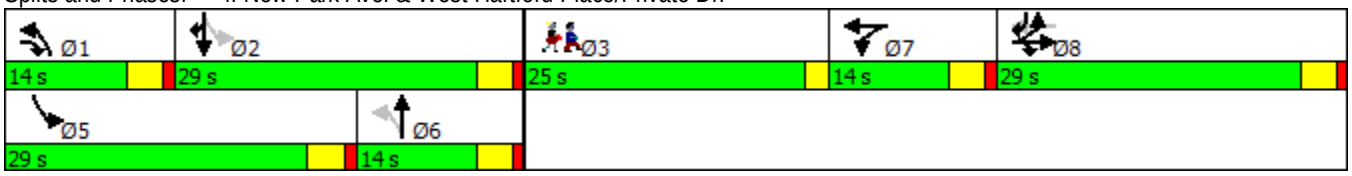

Lane Group	Ø3
Total Delay	
LOS	
Approach Delay	
Approach LOS	
Queue Length 50th (ft)	
Queue Length 95th (ft)	
Internal Link Dist (ft)	
Turn Bay Length (ft)	
Base Capacity (vph)	
Starvation Cap Reductn	
Spillback Cap Reductn	
Storage Cap Reductn	
Reduced v/c Ratio	

Intersection Summary

Movement	EBL	EBT	EBR	WBL	WBT	WBR	NBL	NBT	NBR	SBL	SBT	SBR
Lane Configurations												
Traffic Volume (vph)	144	3	80	2	1	3	115	651	4	4	387	172
Future Volume (vph)	144	3	80	2	1	3	115	651	4	4	387	172
Ideal Flow (vphpl)	1900	1900	1900	1900	1900	1900	1900	1900	1900	1900	1900	1900
Total Lost time (s)	4.0	4.0	4.0		4.0		4.0	4.0		4.0	4.0	4.0
Lane Util. Factor	0.95	0.95	1.00		1.00		1.00	0.95		1.00	0.95	1.00
Frt	1.00	1.00	0.85		0.93		1.00	1.00		1.00	1.00	0.85
Flt Protected	0.95	0.96	1.00		0.99		0.95	1.00		0.95	1.00	1.00
Satd. Flow (prot)	1649	1665	1553		1750		1770	3531		1805	3574	1568
Flt Permitted	0.95	0.96	1.00		0.94		0.37	1.00		0.38	1.00	1.00
Satd. Flow (perm)	1649	1665	1553		1659		696	3531		729	3574	1568
Peak-hour factor, PHF	0.78	0.38	0.80	0.50	0.25	0.38	0.78	0.94	0.33	1.00	0.93	0.84
Adj. Flow (vph)	185	8	100	4	4	8	147	693	12	4	416	205
RTOR Reduction (vph)	0	0	57	0	6	0	0	1	0	0	0	111
Lane Group Flow (vph)	96	97	43	0	10	0	147	704	0	4	416	94
Heavy Vehicles (%)	4%	0%	4%	0%	0%	0%	2%	2%	0%	0%	1%	3%
Turn Type	Split	NA	pt+ov	Split	NA		pm+pt	NA		pm+pt	NA	pt+ov
Protected Phases	8!	8	8 1	7	7		1	6		5	2	2 8!
Permitted Phases					8!		6			2		
Actuated Green, G (s)	7.9	7.9	19.9		8.7		25.1	20.3		13.9	13.1	21.0
Effective Green, g (s)	7.9	7.9	19.9		8.7		25.1	20.3		13.9	13.1	21.0
Actuated g/C Ratio	0.17	0.17	0.43		0.19		0.55	0.44		0.30	0.29	0.46
Clearance Time (s)	4.0	4.0			4.0		4.0	4.0		4.0	4.0	
Vehicle Extension (s)	3.0	3.0			3.0		3.0	3.0		3.0	3.0	
Lane Grp Cap (vph)	284	287	674		316		569	1565		240	1022	718
v/s Ratio Prot	0.06	c0.06	0.03		c0.00		c0.05	c0.20		0.00	0.12	0.06
v/s Ratio Perm					0.01		0.10			0.00		
v/c Ratio	0.34	0.34	0.06		0.03		0.26	0.45		0.02	0.41	0.13
Uniform Delay, d1	16.7	16.7	7.5		15.1		5.4	8.9		11.1	13.2	7.1
Progression Factor	1.00	1.00	1.00		1.00		1.00	1.00		1.00	1.00	1.00
Incremental Delay, d2	0.7	0.7	0.0		0.0		0.2	0.2		0.0	0.3	0.1
Delay (s)	17.4	17.4	7.6		15.2		5.6	9.1		11.2	13.5	7.2
Level of Service	B	B	A		B		A	A		B	B	A
Approach Delay (s)		14.0			15.2			8.5			11.4	
Approach LOS		B			B			A			B	

Intersection Summary			
HCM 2000 Control Delay	10.5	HCM 2000 Level of Service	B
HCM 2000 Volume to Capacity ratio	0.45		
Actuated Cycle Length (s)	45.8	Sum of lost time (s)	18.0
Intersection Capacity Utilization	43.1%	ICU Level of Service	A
Analysis Period (min)	15		

! Phase conflict between lane groups.
c Critical Lane Group

Lane Group	EBL	EBT	EBR	WBL	WBT	WBR	NBL	NBT	NBR	SBL	SBT	SBR
Lane Configurations												
Traffic Volume (vph)	28	268	114	198	142	289	89	414	262	230	284	19
Future Volume (vph)	28	268	114	198	142	289	89	414	262	230	284	19
Ideal Flow (vphpl)	1900	1900	1900	1900	1900	1900	1900	1900	1900	1900	1900	1900
Storage Length (ft)	50		0	0		0	150		0	410		0
Storage Lanes	1		1	1		1	1		0	1		0
Taper Length (ft)	25			25			25			25		
Lane Util. Factor	1.00	1.00	1.00	1.00	1.00	1.00	1.00	0.95	0.95	1.00	0.95	0.95
Frt			0.850			0.850		0.944			0.985	
Flt Protected	0.950			0.950			0.950			0.950		
Satd. Flow (prot)	1787	1881	1583	1770	1863	1538	1736	3253	0	1770	3387	0
Flt Permitted	0.655			0.244			0.555			0.215		
Satd. Flow (perm)	1232	1881	1583	455	1863	1538	1014	3253	0	400	3387	0
Right Turn on Red			Yes			Yes			Yes			Yes
Satd. Flow (RTOR)			168			336		104			10	
Link Speed (mph)		30			30			30			30	
Link Distance (ft)		282			376			402			1063	
Travel Time (s)		6.4			8.5			9.1			24.2	
Peak Hour Factor	0.70	0.77	0.68	0.87	0.88	0.86	0.80	0.88	0.94	0.91	0.97	0.59
Heavy Vehicles (%)	1%	1%	2%	2%	2%	5%	4%	4%	6%	2%	5%	5%
Adj. Flow (vph)	40	348	168	228	161	336	111	470	279	253	293	32
Shared Lane Traffic (%)												
Lane Group Flow (vph)	40	348	168	228	161	336	111	749	0	253	325	0
Turn Type	pm+pt	NA	Perm	pm+pt	NA	custom	pm+pt	NA		pm+pt	NA	
Protected Phases	7	4		3	8	8	1	6		5	2	
Permitted Phases	4		4	8		5	6			2		
Detector Phase	7	4	4	3	8	8	1	6		5	2	
Switch Phase												
Minimum Initial (s)	5.0	9.0	9.0	5.0	9.0	9.0	6.0	15.0		6.0	15.0	
Minimum Split (s)	9.5	14.0	14.0	9.5	14.0	14.0	10.5	20.1		10.5	20.1	
Total Split (s)	14.0	21.0	21.0	14.0	21.0	21.0	14.0	21.0		14.0	21.0	
Total Split (%)	14.0%	21.0%	21.0%	14.0%	21.0%	21.0%	14.0%	21.0%		14.0%	21.0%	
Maximum Green (s)	10.0	16.0	16.0	10.0	16.0	16.0	10.0	15.9		10.0	15.9	
Yellow Time (s)	3.0	3.0	3.0	3.0	3.0	3.0	3.0	3.6		3.0	3.6	
All-Red Time (s)	1.0	2.0	2.0	1.0	2.0	2.0	1.0	1.5		1.0	1.5	
Lost Time Adjust (s)	0.0	0.0	0.0	0.0	0.0	0.0	0.0	0.0		0.0	0.0	
Total Lost Time (s)	4.0	5.0	5.0	4.0	5.0	5.0	4.0	5.1		4.0	5.1	
Lead/Lag	Lead	Lag	Lag	Lead	Lag	Lag	Lead	Lag		Lead	Lag	
Lead-Lag Optimize?	Yes	Yes	Yes	Yes	Yes	Yes	Yes				Yes	
Vehicle Extension (s)	2.0	2.0	2.0	2.0	2.0	2.0	2.0	2.0		2.0	2.0	
Recall Mode	None	C-Max	C-Max	None	C-Max	C-Max	None	Max		None	Max	
Walk Time (s)												
Flash Dont Walk (s)												
Pedestrian Calls (#/hr)												
Act Effct Green (s)	23.2	16.0	16.0	30.4	23.4	41.5	45.3	36.3		56.5	43.5	
Actuated g/C Ratio	0.23	0.16	0.16	0.30	0.23	0.42	0.45	0.36		0.56	0.44	
v/c Ratio	0.12	1.16	0.43	0.85	0.37	0.40	0.22	0.60		0.58	0.22	
Control Delay	25.8	141.5	9.6	57.2	37.0	3.2	14.3	27.0		19.0	20.2	
Queue Delay	0.0	0.0	0.0	0.0	0.0	0.0	0.0	0.0		0.0	0.0	

Lane Group	Ø9
Lane Configurations	
Traffic Volume (vph)	
Future Volume (vph)	
Ideal Flow (vphpl)	
Storage Length (ft)	
Storage Lanes	
Taper Length (ft)	
Lane Util. Factor	
Frt	
Flt Protected	
Satd. Flow (prot)	
Flt Permitted	
Satd. Flow (perm)	
Right Turn on Red	
Satd. Flow (RTOR)	
Link Speed (mph)	
Link Distance (ft)	
Travel Time (s)	
Peak Hour Factor	
Heavy Vehicles (%)	
Adj. Flow (vph)	
Shared Lane Traffic (%)	
Lane Group Flow (vph)	
Turn Type	
Protected Phases	9
Permitted Phases	
Detector Phase	
Switch Phase	
Minimum Initial (s)	5.0
Minimum Split (s)	22.5
Total Split (s)	30.0
Total Split (%)	30%
Maximum Green (s)	25.5
Yellow Time (s)	3.5
All-Red Time (s)	1.0
Lost Time Adjust (s)	
Total Lost Time (s)	
Lead/Lag	
Lead-Lag Optimize?	
Vehicle Extension (s)	3.0
Recall Mode	None
Walk Time (s)	7.0
Flash Dont Walk (s)	11.0
Pedestrian Calls (#/hr)	10
Act Effct Green (s)	
Actuated g/C Ratio	
v/c Ratio	
Control Delay	
Queue Delay	

Lane Group	EBL	EBT	EBR	WBL	WBT	WBR	NBL	NBT	NBR	SBL	SBT	SBR
Total Delay	25.8	141.5	9.6	57.2	37.0	3.2	14.3	27.0		19.0	20.2	
LOS	C	F	A	E	D	A	B	C		B	C	
Approach Delay		93.3			27.7			25.3			19.7	
Approach LOS		F			C			C			B	
Queue Length 50th (ft)	18	~264	0	115	91	0	27	158		68	57	
Queue Length 95th (ft)	32	#346	18	#203	154	26	74	#390		180	135	
Internal Link Dist (ft)		202			296			322			983	
Turn Bay Length (ft)	50						150			410		
Base Capacity (vph)	388	300	394	269	436	835	559	1246		433	1478	
Starvation Cap Reductn	0	0	0	0	0	0	0	0		0	0	
Spillback Cap Reductn	0	0	0	0	0	0	0	0		0	0	
Storage Cap Reductn	0	0	0	0	0	0	0	0		0	0	
Reduced v/c Ratio	0.10	1.16	0.43	0.85	0.37	0.40	0.20	0.60		0.58	0.22	

Intersection Summary

Area Type: Other
Cycle Length: 100
Actuated Cycle Length: 100
Offset: 35.1 (35%), Referenced to phase 4:EBTL and 8:WBTL, Start of Yellow
Natural Cycle: 100
Control Type: Actuated-Coordinated
Maximum v/c Ratio: 1.16
Intersection Signal Delay: 38.7 Intersection LOS: D
Intersection Capacity Utilization 72.7% ICU Level of Service C
Analysis Period (min) 15
~ Volume exceeds capacity, queue is theoretically infinite.
Queue shown is maximum after two cycles.
95th percentile volume exceeds capacity, queue may be longer.
Queue shown is maximum after two cycles.

Splits and Phases: 5: New Park Ave. & Flatbush Ave./Flatbush Ave.

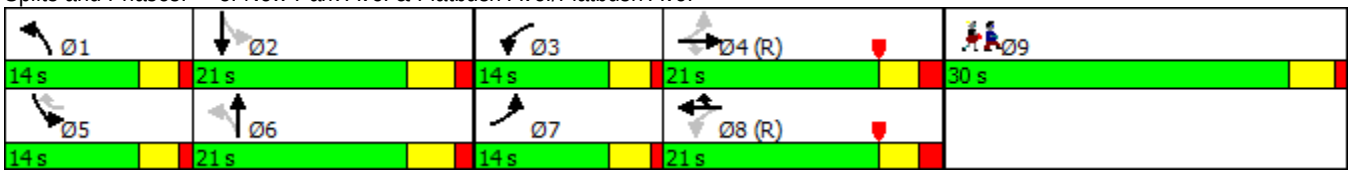

Lane Group	Ø9
Total Delay	
LOS	
Approach Delay	
Approach LOS	
Queue Length 50th (ft)	
Queue Length 95th (ft)	
Internal Link Dist (ft)	
Turn Bay Length (ft)	
Base Capacity (vph)	
Starvation Cap Reductn	
Spillback Cap Reductn	
Storage Cap Reductn	
Reduced v/c Ratio	

Intersection Summary

Movement	EBL	EBT	EBR	WBL	WBT	WBR	NBL	NBT	NBR	SBL	SBT	SBR
Lane Configurations												
Traffic Volume (vph)	28	268	114	198	142	289	89	414	262	230	284	19
Future Volume (vph)	28	268	114	198	142	289	89	414	262	230	284	19
Ideal Flow (vphpl)	1900	1900	1900	1900	1900	1900	1900	1900	1900	1900	1900	1900
Total Lost time (s)	4.0	5.0	5.0	4.0	5.0	5.0	4.0	5.1		4.0	5.1	
Lane Util. Factor	1.00	1.00	1.00	1.00	1.00	1.00	1.00	0.95		1.00	0.95	
Frt	1.00	1.00	0.85	1.00	1.00	0.85	1.00	0.94		1.00	0.99	
Flt Protected	0.95	1.00	1.00	0.95	1.00	1.00	0.95	1.00		0.95	1.00	
Satd. Flow (prot)	1787	1881	1583	1770	1863	1538	1736	3254		1770	3387	
Flt Permitted	0.66	1.00	1.00	0.24	1.00	1.00	0.56	1.00		0.21	1.00	
Satd. Flow (perm)	1232	1881	1583	454	1863	1538	1014	3254		400	3387	
Peak-hour factor, PHF	0.70	0.77	0.68	0.87	0.88	0.86	0.80	0.88	0.94	0.91	0.97	0.59
Adj. Flow (vph)	40	348	168	228	161	336	111	470	279	253	293	32
RTOR Reduction (vph)	0	0	147	0	0	224	0	66	0	0	6	0
Lane Group Flow (vph)	40	348	21	228	161	112	111	683	0	253	319	0
Heavy Vehicles (%)	1%	1%	2%	2%	2%	5%	4%	4%	6%	2%	5%	5%
Turn Type	pm+pt	NA	Perm	pm+pt	NA	custom	pm+pt	NA		pm+pt	NA	
Protected Phases	7	4		3	8	8	1	6		5	2	
Permitted Phases	4		4	8		5	6			2		
Actuated Green, G (s)	16.6	12.4	12.4	26.4	18.2	33.3	44.2	36.3		55.4	43.5	
Effective Green, g (s)	16.6	12.4	12.4	26.4	18.2	33.3	44.2	36.3		55.4	43.5	
Actuated g/C Ratio	0.17	0.12	0.12	0.26	0.18	0.33	0.44	0.36		0.55	0.44	
Clearance Time (s)	4.0	5.0	5.0	4.0	5.0	5.0	4.0	5.1		4.0	5.1	
Vehicle Extension (s)	2.0	2.0	2.0	2.0	2.0	2.0	2.0	2.0		2.0	2.0	
Lane Grp Cap (vph)	227	233	196	251	339	512	505	1181		428	1473	
v/s Ratio Prot	0.01	c0.18		c0.09	0.09	0.04	0.02	0.21		c0.09	0.09	
v/s Ratio Perm	0.02		0.01	0.15		0.03	0.08			c0.24		
v/c Ratio	0.18	1.49	0.11	0.91	0.47	0.22	0.22	0.58		0.59	0.22	
Uniform Delay, d1	35.6	43.8	38.9	32.8	36.6	24.0	16.6	25.7		13.8	17.6	
Progression Factor	1.00	1.00	1.00	1.00	1.00	1.00	1.00	1.00		1.00	1.00	
Incremental Delay, d2	0.1	243.4	1.1	32.6	4.7	0.1	0.1	2.1		1.5	0.3	
Delay (s)	35.7	287.2	40.0	65.4	41.3	24.1	16.7	27.7		15.3	18.0	
Level of Service	D	F	D	E	D	C	B	C		B	B	
Approach Delay (s)		194.4			40.9			26.3			16.8	
Approach LOS		F			D			C			B	

Intersection Summary			
HCM 2000 Control Delay	62.6	HCM 2000 Level of Service	E
HCM 2000 Volume to Capacity ratio	0.77		
Actuated Cycle Length (s)	100.0	Sum of lost time (s)	22.6
Intersection Capacity Utilization	72.7%	ICU Level of Service	C
Analysis Period (min)	15		
c Critical Lane Group			

Lane Group	EBL	EBT	EBR	WBL	WBT	WBR	NBL	NBT	NBR	SBL	SBT	SBR
Lane Configurations												
Traffic Volume (vph)	3	0	289	0	1	0	361	354	2	0	210	5
Future Volume (vph)	3	0	289	0	1	0	361	354	2	0	210	5
Ideal Flow (vphpl)	1900	1900	1900	1900	1900	1900	1900	1900	1900	1900	1900	1900
Storage Length (ft)	0		0	0		0	0		0	0		80
Storage Lanes	1		2	0		0	0		0	0		1
Taper Length (ft)	25			25			25			25		
Lane Util. Factor	1.00	1.00	0.88	1.00	1.00	1.00	0.95	0.95	0.95	0.95	0.95	1.00
Frt			0.850					0.998				0.850
Flt Protected	0.950							0.977				
Satd. Flow (prot)	1805	0	2760	0	1900	0	0	3434	0	0	3406	1615
Flt Permitted	0.950							0.455				
Satd. Flow (perm)	1805	0	2760	0	1900	0	0	1599	0	0	3406	1615
Right Turn on Red			Yes			Yes			Yes			Yes
Satd. Flow (RTOR)			292					1				147
Link Speed (mph)		30			30			30			30	
Link Distance (ft)		506			113			1063			446	
Travel Time (s)		11.5			2.6			24.2			10.1	
Peak Hour Factor	0.75	0.92	0.99	0.25	0.25	0.25	0.97	0.89	0.25	0.25	0.85	0.62
Heavy Vehicles (%)	0%	0%	3%	0%	0%	0%	2%	3%	0%	0%	6%	0%
Adj. Flow (vph)	4	0	292	0	4	0	372	398	8	0	247	8
Shared Lane Traffic (%)												
Lane Group Flow (vph)	4	0	292	0	4	0	0	778	0	0	247	8
Turn Type	Prot		custom		NA		custom	NA			NA	Perm
Protected Phases	8		1 8	4	4		6!	1 6			2!	
Permitted Phases							1			2		2
Detector Phase	8		1 8	4	4		6	1 6		2	2	2
Switch Phase												
Minimum Initial (s)	10.0			5.0	5.0		15.0			15.0	15.0	15.0
Minimum Split (s)	15.0			24.1	24.1		21.3			21.3	21.3	21.3
Total Split (s)	30.0			21.1	21.1		68.3			36.3	36.3	36.3
Total Split (%)	21.2%			14.9%	14.9%		48.3%			25.7%	25.7%	25.7%
Maximum Green (s)	25.0			15.0	15.0		62.0			30.0	30.0	30.0
Yellow Time (s)	3.0			3.0	3.0		3.0			3.0	3.0	3.0
All-Red Time (s)	2.0			3.1	3.1		3.3			3.3	3.3	3.3
Lost Time Adjust (s)	0.0				0.0						0.0	0.0
Total Lost Time (s)	5.0				6.1						6.3	6.3
Lead/Lag										Lag	Lag	Lag
Lead-Lag Optimize?										Yes	Yes	Yes
Vehicle Extension (s)	2.0			2.0	2.0		3.0			3.0	3.0	3.0
Recall Mode	None			None	None		Max			None	None	None
Walk Time (s)												
Flash Dont Walk (s)												
Pedestrian Calls (#/hr)												
Act Effct Green (s)	10.0		38.5		5.1			61.5			31.7	31.7
Actuated g/C Ratio	0.12		0.45		0.06			0.72			0.37	0.37
v/c Ratio	0.02		0.21		0.04			0.32			0.20	0.01
Control Delay	36.0		2.4		41.0			5.2			20.1	0.0
Queue Delay	0.0		0.0		0.0			0.0			0.0	0.0

Lane Group	Ø1	Ø9
Lane Configurations		
Traffic Volume (vph)		
Future Volume (vph)		
Ideal Flow (vphpl)		
Storage Length (ft)		
Storage Lanes		
Taper Length (ft)		
Lane Util. Factor		
Frt		
Flt Protected		
Satd. Flow (prot)		
Flt Permitted		
Satd. Flow (perm)		
Right Turn on Red		
Satd. Flow (RTOR)		
Link Speed (mph)		
Link Distance (ft)		
Travel Time (s)		
Peak Hour Factor		
Heavy Vehicles (%)		
Adj. Flow (vph)		
Shared Lane Traffic (%)		
Lane Group Flow (vph)		
Turn Type		
Protected Phases	1	9
Permitted Phases		
Detector Phase		
Switch Phase		
Minimum Initial (s)	5.0	5.0
Minimum Split (s)	12.0	22.0
Total Split (s)	32.0	22.0
Total Split (%)	23%	16%
Maximum Green (s)	25.0	18.0
Yellow Time (s)	3.0	4.0
All-Red Time (s)	4.0	0.0
Lost Time Adjust (s)		
Total Lost Time (s)		
Lead/Lag	Lead	
Lead-Lag Optimize?	Yes	
Vehicle Extension (s)	2.0	3.0
Recall Mode	None	None
Walk Time (s)		5.0
Flash Dont Walk (s)		12.0
Pedestrian Calls (#/hr)		0
Act Effct Green (s)		
Actuated g/C Ratio		
v/c Ratio		
Control Delay		
Queue Delay		

Lane Group	EBL	EBT	EBR	WBL	WBT	WBR	NBL	NBT	NBR	SBL	SBT	SBR
Total Delay	36.0		2.4		41.0			5.2			20.1	0.0
LOS	D		A		D			A			C	A
Approach Delay		2.8			41.0			5.2			19.5	
Approach LOS		A			D			A			B	
Queue Length 50th (ft)	2		0		2			58			45	0
Queue Length 95th (ft)	10		25		4			130			82	0
Internal Link Dist (ft)		426			33			983			366	
Turn Bay Length (ft)												80
Base Capacity (vph)	528		1448		334			2466			1259	690
Starvation Cap Reductn	0		0		0			0			0	0
Spillback Cap Reductn	0		0		0			0			0	0
Storage Cap Reductn	0		0		0			0			0	0
Reduced v/c Ratio	0.01		0.20		0.01			0.32			0.20	0.01

Intersection Summary	
Area Type: Other	
Cycle Length: 141.4	
Actuated Cycle Length: 85.6	
Natural Cycle: 95	
Control Type: Actuated-Uncoordinated	
Maximum v/c Ratio: 0.32	
Intersection Signal Delay: 7.5	Intersection LOS: A
Intersection Capacity Utilization 53.2%	ICU Level of Service A
Analysis Period (min) 15	

! Phase conflict between lane groups.

Splits and Phases: 6: New Park Ave. & Prospect Ave./Private Dr.

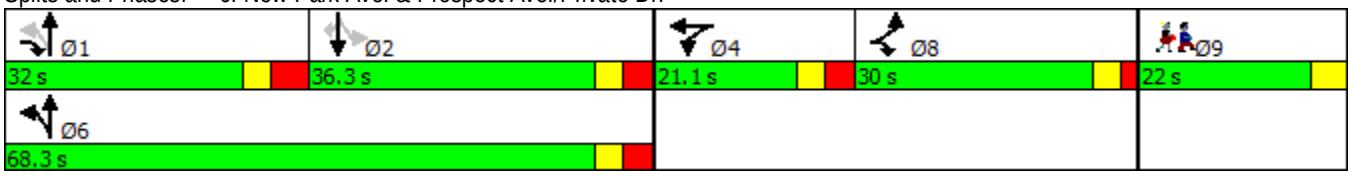

Lane Group	Ø1	Ø9
Total Delay		
LOS		
Approach Delay		
Approach LOS		
Queue Length 50th (ft)		
Queue Length 95th (ft)		
Internal Link Dist (ft)		
Turn Bay Length (ft)		
Base Capacity (vph)		
Starvation Cap Reductn		
Spillback Cap Reductn		
Storage Cap Reductn		
Reduced v/c Ratio		

Intersection Summary

Movement	EBL	EBT	EBR	WBL	WBT	WBR	NBL	NBT	NBR	SBL	SBT	SBR
Lane Configurations												
Traffic Volume (vph)	3	0	289	0	1	0	361	354	2	0	210	5
Future Volume (vph)	3	0	289	0	1	0	361	354	2	0	210	5
Ideal Flow (vphpl)	1900	1900	1900	1900	1900	1900	1900	1900	1900	1900	1900	1900
Total Lost time (s)	5.0		7.0		6.1			7.0			6.3	6.3
Lane Util. Factor	1.00		0.88		1.00			0.95			0.95	1.00
Frt	1.00		0.85		1.00			1.00			1.00	0.85
Flt Protected	0.95		1.00		1.00			0.98			1.00	1.00
Satd. Flow (prot)	1805		2760		1900			3435			3406	1615
Flt Permitted	0.95		1.00		1.00			0.46			1.00	1.00
Satd. Flow (perm)	1805		2760		1900			1600			3406	1615
Peak-hour factor, PHF	0.75	0.92	0.99	0.25	0.25	0.25	0.97	0.89	0.25	0.25	0.85	0.62
Adj. Flow (vph)	4	0	292	0	4	0	372	398	8	0	247	8
RTOR Reduction (vph)	0	0	184	0	0	0	0	0	0	0	0	5
Lane Group Flow (vph)	4	0	108	0	4	0	0	778	0	0	247	3
Heavy Vehicles (%)	0%	0%	3%	0%	0%	0%	2%	3%	0%	0%	6%	0%
Turn Type	Prot		custom		NA		custom	NA			NA	Perm
Protected Phases	8		1 8	4	4		6!	1 6			2!	
Permitted Phases							1			2		2
Actuated Green, G (s)	10.0		38.5		1.0			62.2			31.7	31.7
Effective Green, g (s)	10.0		33.5		1.0			62.2			31.7	31.7
Actuated g/C Ratio	0.11		0.37		0.01			0.69			0.35	0.35
Clearance Time (s)	5.0				6.1						6.3	6.3
Vehicle Extension (s)	2.0				2.0						3.0	3.0
Lane Grp Cap (vph)	199		1020		20			2358			1191	565
v/s Ratio Prot	0.00		c0.04		c0.00			c0.23			0.07	
v/s Ratio Perm												0.00
v/c Ratio	0.02		0.11		0.20			0.33			0.21	0.00
Uniform Delay, d1	35.9		18.7		44.4			5.8			20.6	19.2
Progression Factor	1.00		1.00		1.00			1.00			1.00	1.00
Incremental Delay, d2	0.0		0.0		1.8			0.0			0.1	0.0
Delay (s)	35.9		18.7		46.2			5.8			20.7	19.2
Level of Service	D		B		D			A			C	B
Approach Delay (s)		19.0			46.2			5.8			20.7	
Approach LOS		B			D			A			C	

Intersection Summary			
HCM 2000 Control Delay	11.7	HCM 2000 Level of Service	B
HCM 2000 Volume to Capacity ratio	0.35		
Actuated Cycle Length (s)	90.6	Sum of lost time (s)	28.4
Intersection Capacity Utilization	53.2%	ICU Level of Service	A
Analysis Period (min)	15		

! Phase conflict between lane groups.
c Critical Lane Group

Lane Group	EBL	EBT	EBR	WBL	WBT	WBR	NBL	NBT	NBR	SBL	SBT	SBR
Lane Configurations												
Traffic Volume (vph)	265	773	3	1	787	378	0	0	1	407	2	314
Future Volume (vph)	265	773	3	1	787	378	0	0	1	407	2	314
Ideal Flow (vphpl)	1900	1900	1900	1900	1900	1900	1900	1900	1900	1900	1900	1900
Lane Width (ft)	10	10	12	12	12	12	12	12	12	11	12	11
Lane Util. Factor	1.00	0.95	0.95	0.95	0.95	1.00	1.00	1.00	1.00	0.95	0.95	1.00
Frt		0.999				0.850		0.865			0.869	
Flt Protected	0.950									0.950	0.994	
Satd. Flow (prot)	1668	3322	0	0	3566	1599	0	1236	0	1625	1527	0
Flt Permitted	0.111				0.951					0.950	0.994	
Satd. Flow (perm)	195	3322	0	0	3392	1599	0	1236	0	1625	1527	0
Right Turn on Red			Yes			No			Yes			Yes
Satd. Flow (RTOR)								269			247	
Link Speed (mph)		30			30			30			30	
Link Distance (ft)		386			245			138			2131	
Travel Time (s)		8.8			5.6			3.1			48.4	
Peak Hour Factor	0.92	0.95	0.75	0.25	0.91	0.86	0.25	0.25	0.25	0.89	0.50	0.91
Heavy Vehicles (%)	1%	1%	67%	50%	1%	1%	0%	0%	33%	2%	100%	1%
Adj. Flow (vph)	288	814	4	4	865	440	0	0	4	457	4	345
Shared Lane Traffic (%)										10%		
Lane Group Flow (vph)	288	818	0	0	869	440	0	4	0	411	395	0
Turn Type	D.P+P	NA		Perm	NA	pt+ov		NA		Split	NA	
Protected Phases	1	1 2			2	2 4	5	5		4	4	
Permitted Phases	2			2								
Detector Phase	1	1 2		2	2	2 4	5	5		4	4	
Switch Phase												
Minimum Initial (s)	5.0			15.0	15.0		5.0	5.0		5.0	5.0	
Minimum Split (s)	9.5			20.5	20.5		9.5	9.5		10.5	10.5	
Total Split (s)	14.0			40.0	40.0		15.0	15.0		41.0	41.0	
Total Split (%)	10.3%			29.4%	29.4%		11.0%	11.0%		30.1%	30.1%	
Maximum Green (s)	9.5			34.5	34.5		10.5	10.5		35.5	35.5	
Yellow Time (s)	3.0			3.0	3.0		3.0	3.0		3.0	3.0	
All-Red Time (s)	1.5			2.5	2.5		1.5	1.5		2.5	2.5	
Lost Time Adjust (s)	0.0				0.0			0.0		0.0	0.0	
Total Lost Time (s)	4.5				5.5			4.5		5.5	5.5	
Lead/Lag	Lead			Lag	Lag					Lag	Lag	
Lead-Lag Optimize?	Yes			Yes	Yes					Yes	Yes	
Vehicle Extension (s)	1.5			2.5	2.5		1.5	1.5		1.5	1.5	
Recall Mode	None			C-Max	C-Max		None	None		None	None	
Walk Time (s)												
Flash Dont Walk (s)												
Pedestrian Calls (#/hr)												
Act Effct Green (s)	77.1	81.6			39.6	86.5		5.0		42.5	42.5	
Actuated g/C Ratio	0.57	0.60			0.29	0.64		0.04		0.31	0.31	
v/c Ratio	0.57	0.41			0.88	0.43		0.01		0.81	0.61	
Control Delay	32.9	16.4			57.0	12.1		0.0		55.8	17.7	
Queue Delay	0.0	0.0			0.0	0.0		0.0		0.0	0.0	
Total Delay	32.9	16.4			57.0	12.1		0.0		55.8	17.7	
LOS	C	B			E	B		A		E	B	

Lane Group	Ø3
Lane Configurations	
Traffic Volume (vph)	
Future Volume (vph)	
Ideal Flow (vphpl)	
Lane Width (ft)	
Lane Util. Factor	
Frt	
Flt Protected	
Satd. Flow (prot)	
Flt Permitted	
Satd. Flow (perm)	
Right Turn on Red	
Satd. Flow (RTOR)	
Link Speed (mph)	
Link Distance (ft)	
Travel Time (s)	
Peak Hour Factor	
Heavy Vehicles (%)	
Adj. Flow (vph)	
Shared Lane Traffic (%)	
Lane Group Flow (vph)	
Turn Type	
Protected Phases	3
Permitted Phases	
Detector Phase	
Switch Phase	
Minimum Initial (s)	7.0
Minimum Split (s)	33.5
Total Split (s)	26.0
Total Split (%)	19%
Maximum Green (s)	18.5
Yellow Time (s)	3.5
All-Red Time (s)	4.0
Lost Time Adjust (s)	
Total Lost Time (s)	
Lead/Lag	Lead
Lead-Lag Optimize?	Yes
Vehicle Extension (s)	3.0
Recall Mode	None
Walk Time (s)	7.0
Flash Dont Walk (s)	19.0
Pedestrian Calls (#/hr)	0
Act Effct Green (s)	
Actuated g/C Ratio	
v/c Ratio	
Control Delay	
Queue Delay	
Total Delay	
LOS	

Lane Group	EBL	EBT	EBR	WBL	WBT	WBR	NBL	NBT	NBR	SBL	SBT	SBR
Approach Delay		20.7			41.9						37.1	
Approach LOS		C			D						D	
Queue Length 50th (ft)	162	188			364	153		0		348	111	
Queue Length 95th (ft)	297	303			#555	177		0		454	21	
Internal Link Dist (ft)		306			165			58			2051	
Turn Bay Length (ft)												
Base Capacity (vph)	505	1992			987	1019		343		511	649	
Starvation Cap Reductn	0	0			0	0		0		0	0	
Spillback Cap Reductn	0	0			0	0		0		0	0	
Storage Cap Reductn	0	0			0	0		0		0	0	
Reduced v/c Ratio	0.57	0.41			0.88	0.43		0.01		0.80	0.61	

Intersection Summary

Area Type: Other
Cycle Length: 136
Actuated Cycle Length: 136
Offset: 34.5 (25%), Referenced to phase 2:EBWB, Start of Yellow
Natural Cycle: 145
Control Type: Actuated-Coordinated
Maximum v/c Ratio: 0.88
Intersection Signal Delay: 33.4 Intersection LOS: C
Intersection Capacity Utilization 83.8% ICU Level of Service E
Analysis Period (min) 15
95th percentile volume exceeds capacity, queue may be longer.
Queue shown is maximum after two cycles.

Splits and Phases: 1: New Park Ave. & New Britain Ave.

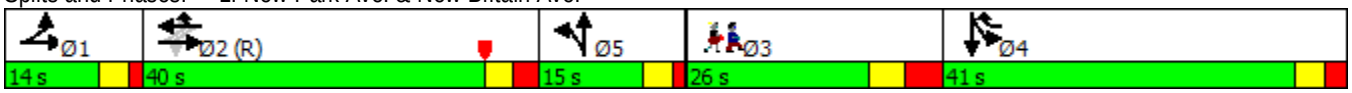

Lane Group	Ø3
Approach Delay	
Approach LOS	
Queue Length 50th (ft)	
Queue Length 95th (ft)	
Internal Link Dist (ft)	
Turn Bay Length (ft)	
Base Capacity (vph)	
Starvation Cap Reductn	
Spillback Cap Reductn	
Storage Cap Reductn	
Reduced v/c Ratio	

Intersection Summary

Movement	EBL	EBT	EBR	WBL	WBT	WBR	NBL	NBT	NBR	SBL	SBT	SBR
Lane Configurations												
Traffic Volume (vph)	265	773	3	1	787	378	0	0	1	407	2	314
Future Volume (vph)	265	773	3	1	787	378	0	0	1	407	2	314
Ideal Flow (vphpl)	1900	1900	1900	1900	1900	1900	1900	1900	1900	1900	1900	1900
Lane Width	10	10	12	12	12	12	12	12	12	11	12	11
Total Lost time (s)	4.5	4.5			5.5	5.5		4.5		5.5	5.5	
Lane Util. Factor	1.00	0.95			0.95	1.00		1.00		0.95	0.95	
Frt	1.00	1.00			1.00	0.85		0.86		1.00	0.87	
Flt Protected	0.95	1.00			1.00	1.00		1.00		0.95	0.99	
Satd. Flow (prot)	1668	3323			3565	1599		1236		1625	1527	
Flt Permitted	0.11	1.00			0.95	1.00		1.00		0.95	0.99	
Satd. Flow (perm)	195	3323			3392	1599		1236		1625	1527	
Peak-hour factor, PHF	0.92	0.95	0.75	0.25	0.91	0.86	0.25	0.25	0.25	0.89	0.50	0.91
Adj. Flow (vph)	288	814	4	4	865	440	0	0	4	457	4	345
RTOR Reduction (vph)	0	0	0	0	0	0	0	4	0	0	170	0
Lane Group Flow (vph)	288	818	0	0	869	440	0	0	0	411	225	0
Heavy Vehicles (%)	1%	1%	67%	50%	1%	1%	0%	0%	33%	2%	100%	1%
Turn Type	D.P+P	NA		Perm	NA	pt+ov		NA		Split	NA	
Protected Phases	1	1 2			2	2 4	5	5		4	4	
Permitted Phases	2			2								
Actuated Green, G (s)	72.5	77.0			36.0	78.5		1.0		42.5	42.5	
Effective Green, g (s)	72.5	77.0			36.0	78.5		1.0		42.5	42.5	
Actuated g/C Ratio	0.53	0.57			0.26	0.58		0.01		0.31	0.31	
Clearance Time (s)	4.5				5.5			4.5		5.5	5.5	
Vehicle Extension (s)	1.5				2.5			1.5		1.5	1.5	
Lane Grp Cap (vph)	499	1881			897	922		9		507	477	
v/s Ratio Prot	c0.15	0.25				0.28		c0.00		c0.25	0.15	
v/s Ratio Perm	0.15				c0.26							
v/c Ratio	0.58	0.43			0.97	0.48		0.00		0.81	0.47	
Uniform Delay, d1	28.7	17.0			49.4	16.8		67.0		43.0	37.7	
Progression Factor	1.00	1.00			1.00	1.00		1.00		1.00	1.00	
Incremental Delay, d2	1.0	0.1			23.4	0.1		0.1		9.0	0.3	
Delay (s)	29.7	17.0			72.8	16.9		67.1		52.1	38.0	
Level of Service	C	B			E	B		E		D	D	
Approach Delay (s)		20.3			54.0			67.1			45.2	
Approach LOS		C			D			E			D	

Intersection Summary			
HCM 2000 Control Delay	40.3	HCM 2000 Level of Service	D
HCM 2000 Volume to Capacity ratio	0.83		
Actuated Cycle Length (s)	136.0	Sum of lost time (s)	27.5
Intersection Capacity Utilization	83.8%	ICU Level of Service	E
Analysis Period (min)	15		

c Critical Lane Group

Lane Group	EBL	EBR	NBL	NBT	SBT	SBR
Lane Configurations						
Traffic Volume (vph)	131	104	116	514	658	236
Future Volume (vph)	131	104	116	514	658	236
Ideal Flow (vphpl)	1900	1900	1900	1900	1900	1900
Lane Util. Factor	1.00	1.00	0.95	0.95	0.95	1.00
Frt		0.850				0.850
Flt Protected	0.950			0.991		
Satd. Flow (prot)	1787	1615	0	3548	3574	1615
Flt Permitted	0.950			0.709		
Satd. Flow (perm)	1787	1615	0	2538	3574	1615
Right Turn on Red		Yes				Yes
Satd. Flow (RTOR)		135				268
Link Speed (mph)	30			30	30	
Link Distance (ft)	297			639	425	
Travel Time (s)	6.8			14.5	9.7	
Peak Hour Factor	0.94	0.77	0.88	0.81	0.88	0.88
Heavy Vehicles (%)	1%	0%	0%	1%	1%	0%
Adj. Flow (vph)	139	135	132	635	748	268
Shared Lane Traffic (%)						
Lane Group Flow (vph)	139	135	0	767	748	268
Turn Type	Prot	Prot	D.P+P	NA	NA	Perm
Protected Phases	4	4	1	1 2	2	
Permitted Phases			2			2
Detector Phase	4	4	1	1 2	2	2
Switch Phase						
Minimum Initial (s)	8.0	8.0	8.0		30.0	30.0
Minimum Split (s)	14.0	14.0	12.0		36.0	36.0
Total Split (s)	22.0	22.0	19.0		46.0	46.0
Total Split (%)	25.3%	25.3%	21.8%		52.9%	52.9%
Maximum Green (s)	16.0	16.0	15.0		40.0	40.0
Yellow Time (s)	4.0	4.0	3.0		4.0	4.0
All-Red Time (s)	2.0	2.0	1.0		2.0	2.0
Lost Time Adjust (s)	0.0	0.0			0.0	0.0
Total Lost Time (s)	6.0	6.0			6.0	6.0
Lead/Lag			Lead		Lag	Lag
Lead-Lag Optimize?			Yes		Yes	Yes
Vehicle Extension (s)	4.0	4.0	4.0		4.0	4.0
Recall Mode	None	None	None		Max	Max
Act Effct Green (s)	12.3	12.3		54.5	40.2	40.2
Actuated g/C Ratio	0.15	0.15		0.67	0.50	0.50
v/c Ratio	0.51	0.38		0.41	0.42	0.29
Control Delay	38.9	9.3		5.1	14.7	2.7
Queue Delay	0.0	0.0		0.0	0.0	0.0
Total Delay	38.9	9.3		5.1	14.7	2.7
LOS	D	A		A	B	A
Approach Delay	24.3			5.1	11.5	
Approach LOS	C			A	B	
Queue Length 50th (ft)	65	0		59	121	0
Queue Length 95th (ft)	124	30		83	184	37

Lane Group	EBL	EBR	NBL	NBT	SBT	SBR
Internal Link Dist (ft)	217			559	345	
Turn Bay Length (ft)						
Base Capacity (vph)	355	429		1967	1775	937
Starvation Cap Reductn	0	0		0	0	0
Spillback Cap Reductn	0	0		0	0	0
Storage Cap Reductn	0	0		0	0	0
Reduced v/c Ratio	0.39	0.31		0.39	0.42	0.29

Intersection Summary	
Area Type: Other	
Cycle Length: 87	
Actuated Cycle Length: 80.9	
Natural Cycle: 65	
Control Type: Actuated-Uncoordinated	
Maximum v/c Ratio: 0.51	
Intersection Signal Delay: 10.8	Intersection LOS: B
Intersection Capacity Utilization 63.2%	ICU Level of Service B
Analysis Period (min) 15	

Splits and Phases: 2: New Park Ave. & Talcott Rd.

Movement	EBL	EBR	NBL	NBT	SBT	SBR
Lane Configurations						
Traffic Volume (vph)	131	104	116	514	658	236
Future Volume (vph)	131	104	116	514	658	236
Ideal Flow (vphpl)	1900	1900	1900	1900	1900	1900
Total Lost time (s)	6.0	6.0		4.0	6.0	6.0
Lane Util. Factor	1.00	1.00		0.95	0.95	1.00
Frt	1.00	0.85		1.00	1.00	0.85
Flt Protected	0.95	1.00		0.99	1.00	1.00
Satd. Flow (prot)	1787	1615		3550	3574	1615
Flt Permitted	0.95	1.00		0.71	1.00	1.00
Satd. Flow (perm)	1787	1615		2538	3574	1615
Peak-hour factor, PHF	0.94	0.77	0.88	0.81	0.88	0.88
Adj. Flow (vph)	139	135	132	635	748	268
RTOR Reduction (vph)	0	114	0	0	0	135
Lane Group Flow (vph)	139	21	0	767	748	133
Heavy Vehicles (%)	1%	0%	0%	1%	1%	0%
Turn Type	Prot	Prot	D.P+P	NA	NA	Perm
Protected Phases	4	4	1	1 2	2	
Permitted Phases			2			2
Actuated Green, G (s)	12.3	12.3		52.5	40.2	40.2
Effective Green, g (s)	12.3	12.3		52.5	40.2	40.2
Actuated g/C Ratio	0.15	0.15		0.65	0.50	0.50
Clearance Time (s)	6.0	6.0			6.0	6.0
Vehicle Extension (s)	4.0	4.0			4.0	4.0
Lane Grp Cap (vph)	272	245		1803	1778	803
v/s Ratio Prot	c0.08	0.01		c0.06	0.21	
v/s Ratio Perm				c0.21		0.08
v/c Ratio	0.51	0.08		0.43	0.42	0.17
Uniform Delay, d1	31.5	29.4		6.8	12.9	11.1
Progression Factor	1.00	1.00		1.00	1.00	1.00
Incremental Delay, d2	2.2	0.2		0.2	0.7	0.4
Delay (s)	33.6	29.6		7.1	13.6	11.6
Level of Service	C	C		A	B	B
Approach Delay (s)	31.7			7.1	13.1	
Approach LOS	C			A	B	

Intersection Summary			
HCM 2000 Control Delay	13.3	HCM 2000 Level of Service	B
HCM 2000 Volume to Capacity ratio	0.44		
Actuated Cycle Length (s)	80.8	Sum of lost time (s)	16.0
Intersection Capacity Utilization	63.2%	ICU Level of Service	B
Analysis Period (min)	15		
c Critical Lane Group			

Lane Group	EBL	EBT	EBR	WBL	WBT	WBR	NBL	NBT	NBR	SBL	SBT	SBR
Lane Configurations												
Traffic Volume (vph)	30	3	17	92	2	87	4	657	61	129	878	2
Future Volume (vph)	30	3	17	92	2	87	4	657	61	129	878	2
Ideal Flow (vphpl)	1900	1900	1900	1900	1900	1900	1900	1900	1900	1900	1900	1900
Storage Length (ft)	0		0	0		0	0		0	249		0
Storage Lanes	0		0	0		1	0		0	1		0
Taper Length (ft)	25			25			25			25		
Lane Util. Factor	1.00	1.00	1.00	1.00	1.00	1.00	0.95	0.95	0.95	1.00	0.95	0.95
Frt		0.942				0.850		0.987			0.999	
Flt Protected		0.977			0.954					0.950		
Satd. Flow (prot)	0	1749	0	0	1745	1583	0	3550	0	1770	3606	0
Flt Permitted		0.778			0.822			0.945		0.290		
Satd. Flow (perm)	0	1392	0	0	1503	1583	0	3355	0	540	3606	0
Right Turn on Red			Yes			Yes			Yes			Yes
Satd. Flow (RTOR)		36				134		30			1	
Link Speed (mph)		30			30			30			30	
Link Distance (ft)		156			393			425			656	
Travel Time (s)		3.5			8.9			9.7			14.9	
Peak Hour Factor	0.75	0.38	0.47	0.66	0.50	0.65	0.50	0.86	0.80	0.90	0.78	0.50
Heavy Vehicles (%)	0%	0%	0%	4%	0%	2%	0%	0%	4%	2%	0%	0%
Adj. Flow (vph)	40	8	36	139	4	134	8	764	76	143	1126	4
Shared Lane Traffic (%)												
Lane Group Flow (vph)	0	84	0	0	143	134	0	848	0	143	1130	0
Turn Type	Perm	NA		Perm	NA	Perm	Perm	NA		pm+pt	NA	
Protected Phases		4			4			2		1	2	
Permitted Phases	4			4		4	2			2		
Detector Phase	4	4		4	4	4	2	2		1	2	
Switch Phase												
Minimum Initial (s)	8.0	8.0		8.0	8.0	8.0	8.0	8.0		5.0	8.0	
Minimum Split (s)	12.0	12.0		12.0	12.0	12.0	12.0	12.0		9.5	12.0	
Total Split (s)	10.5	10.5		10.5	10.5	10.5	45.0	45.0		10.0	45.0	
Total Split (%)	16.0%	16.0%		16.0%	16.0%	16.0%	68.7%	68.7%		15.3%	68.7%	
Maximum Green (s)	6.5	6.5		6.5	6.5	6.5	41.0	41.0		5.5	41.0	
Yellow Time (s)	3.0	3.0		3.0	3.0	3.0	3.0	3.0		3.5	3.0	
All-Red Time (s)	1.0	1.0		1.0	1.0	1.0	1.0	1.0		1.0	1.0	
Lost Time Adjust (s)		0.0			0.0	0.0		0.0		0.0	0.0	
Total Lost Time (s)		4.0			4.0	4.0		4.0		4.5	4.0	
Lead/Lag							Lag	Lag		Lead	Lag	
Lead-Lag Optimize?							Yes	Yes		Yes	Yes	
Vehicle Extension (s)	4.0	4.0		4.0	4.0	4.0	4.0	4.0		3.0	4.0	
Recall Mode	None	None		None	None	None	None	None		None	None	
Act Effct Green (s)		7.0			7.0	7.0		28.4		31.7	28.4	
Actuated g/C Ratio		0.14			0.14	0.14		0.55		0.62	0.55	
v/c Ratio		0.38			0.69	0.40		0.45		0.30	0.57	
Control Delay		22.4			50.0	10.4		7.3		4.1	8.6	
Queue Delay		0.0			0.0	0.0		0.0		0.0	0.0	
Total Delay		22.4			50.0	10.4		7.3		4.1	8.6	
LOS		C			D	B		A		A	A	
Approach Delay		22.4			30.8			7.3			8.1	

Lane Group	EBL	EBT	EBR	WBL	WBT	WBR	NBL	NBT	NBR	SBL	SBT	SBR
Approach LOS		C			C			A			A	
Queue Length 50th (ft)		14			45	0		72		10	109	
Queue Length 95th (ft)		14			59	17		97		19	122	
Internal Link Dist (ft)		76			313			345			576	
Turn Bay Length (ft)										249		
Base Capacity (vph)		222			206	332		2642		479	2833	
Starvation Cap Reductn		0			0	0		0		0	0	
Spillback Cap Reductn		0			0	0		0		0	0	
Storage Cap Reductn		0			0	0		0		0	0	
Reduced v/c Ratio		0.38			0.69	0.40		0.32		0.30	0.40	

Intersection Summary

Area Type: Other
Cycle Length: 65.5
Actuated Cycle Length: 51.3
Natural Cycle: 50
Control Type: Actuated-Uncoordinated
Maximum v/c Ratio: 0.69
Intersection Signal Delay: 10.8 — Intersection LOS: B
Intersection Capacity Utilization 64.1% — ICU Level of Service C
Analysis Period (min) 15

Splits and Phases: 3: New Park Ave. & Colt Dr./Oakwood Ave.

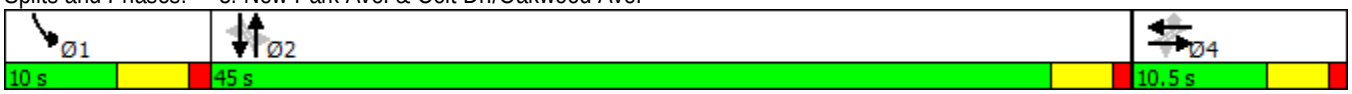

Movement	EBL	EBT	EBR	WBL	WBT	WBR	NBL	NBT	NBR	SBL	SBT	SBR
Lane Configurations												
Traffic Volume (vph)	30	3	17	92	2	87	4	657	61	129	878	2
Future Volume (vph)	30	3	17	92	2	87	4	657	61	129	878	2
Ideal Flow (vphpl)	1900	1900	1900	1900	1900	1900	1900	1900	1900	1900	1900	1900
Total Lost time (s)		4.0			4.0	4.0		4.0		4.5	4.0	
Lane Util. Factor		1.00			1.00	1.00		0.95		1.00	0.95	
Frt		0.94			1.00	0.85		0.99		1.00	1.00	
Flt Protected		0.98			0.95	1.00		1.00		0.95	1.00	
Satd. Flow (prot)		1748			1744	1583		3547		1770	3608	
Flt Permitted		0.78			0.82	1.00		0.94		0.29	1.00	
Satd. Flow (perm)		1392			1503	1583		3353		539	3608	
Peak-hour factor, PHF	0.75	0.38	0.47	0.66	0.50	0.65	0.50	0.86	0.80	0.90	0.78	0.50
Adj. Flow (vph)	40	8	36	139	4	134	8	764	76	143	1126	4
RTOR Reduction (vph)	0	31	0	0	0	116	0	14	0	0	0	0
Lane Group Flow (vph)	0	53	0	0	143	18	0	834	0	143	1130	0
Heavy Vehicles (%)	0%	0%	0%	4%	0%	2%	0%	0%	4%	2%	0%	0%
Turn Type	Perm	NA		Perm	NA	Perm	Perm	NA		pm+pt	NA	
Protected Phases		4			4			2		1	2	
Permitted Phases	4			4		4	2			2		
Actuated Green, G (s)		7.0			7.0	7.0		28.4		32.3	28.4	
Effective Green, g (s)		7.0			7.0	7.0		28.4		32.3	28.4	
Actuated g/C Ratio		0.14			0.14	0.14		0.55		0.62	0.55	
Clearance Time (s)		4.0			4.0	4.0		4.0		4.5	4.0	
Vehicle Extension (s)		4.0			4.0	4.0		4.0		3.0	4.0	
Lane Grp Cap (vph)		188			203	213		1838		428	1978	
v/s Ratio Prot										c0.03	c0.31	
v/s Ratio Perm		0.04			c0.10	0.01		0.25		0.18		
v/c Ratio		0.28			0.70	0.09		0.45		0.33	0.57	
Uniform Delay, d1		20.1			21.4	19.6		7.0		4.2	7.7	
Progression Factor		1.00			1.00	1.00		1.00		1.00	1.00	
Incremental Delay, d2		1.1			11.3	0.2		0.2		0.5	0.5	
Delay (s)		21.3			32.7	19.8		7.3		4.6	8.2	
Level of Service		C			C	B		A		A	A	
Approach Delay (s)		21.3			26.5			7.3			7.8	
Approach LOS		C			C			A			A	

Intersection Summary			
HCM 2000 Control Delay	10.2	HCM 2000 Level of Service	B
HCM 2000 Volume to Capacity ratio	0.57		
Actuated Cycle Length (s)	51.8	Sum of lost time (s)	12.5
Intersection Capacity Utilization	64.1%	ICU Level of Service	C
Analysis Period (min)	15		
c Critical Lane Group			

Lane Group	EBL	EBT	EBR	WBL	WBT	WBR	NBL	NBT	NBR	SBL	SBT	SBR
Lane Configurations												
Traffic Volume (vph)	263	8	221	11	4	5	172	517	10	4	633	293
Future Volume (vph)	263	8	221	11	4	5	172	517	10	4	633	293
Ideal Flow (vphpl)	1900	1900	1900	1900	1900	1900	1900	1900	1900	1900	1900	1900
Storage Length (ft)	0		0	0		0	315		0	200		0
Storage Lanes	1		1	0		0	1		0	1		1
Taper Length (ft)	25			25			25			25		
Lane Util. Factor	0.95	0.95	1.00	1.00	1.00	1.00	1.00	0.95	0.95	1.00	0.95	1.00
Frt			0.850		0.968			0.997				0.850
Flt Protected	0.950	0.955			0.972		0.950			0.950		
Satd. Flow (prot)	1698	1708	1583	0	1788	0	1787	3564	0	1805	3610	1583
Flt Permitted	0.950	0.955			0.972		0.237			0.436		
Satd. Flow (perm)	1698	1708	1583	0	1788	0	446	3564	0	828	3610	1583
Right Turn on Red			Yes			Yes			Yes			Yes
Satd. Flow (RTOR)			240		5			1				318
Link Speed (mph)		30			30			30			30	
Link Distance (ft)		189			135			656			374	
Travel Time (s)		4.3			3.1			14.9			8.5	
Peak Hour Factor	0.92	0.92	0.92	0.92	0.92	0.92	0.92	0.92	0.92	0.92	0.92	0.92
Heavy Vehicles (%)	1%	0%	2%	0%	0%	0%	1%	1%	0%	0%	0%	2%
Adj. Flow (vph)	286	9	240	12	4	5	187	562	11	4	688	318
Shared Lane Traffic (%)	49%											
Lane Group Flow (vph)	146	149	240	0	21	0	187	573	0	4	688	318
Turn Type	Split	NA	pt+ov	Split	NA		pm+pt	NA		pm+pt	NA	pt+ov
Protected Phases	8	8	8 1	7	7		1	6		5	2	2 8
Permitted Phases							6			2		
Detector Phase	8	8	8 1	7	7		1	6		5	2	2 8
Switch Phase												
Minimum Initial (s)	6.0	6.0		4.0	4.0		5.0	5.0		6.0	5.0	
Minimum Split (s)	10.0	10.0		8.0	8.0		9.5	22.5		10.0	22.5	
Total Split (s)	29.0	29.0		14.0	14.0		14.0	14.0		29.0	29.0	
Total Split (%)	26.1%	26.1%		12.6%	12.6%		12.6%	12.6%		26.1%	26.1%	
Maximum Green (s)	25.0	25.0		10.0	10.0		9.5	9.5		25.0	24.5	
Yellow Time (s)	3.0	3.0		3.0	3.0		3.5	3.5		3.0	3.5	
All-Red Time (s)	1.0	1.0		1.0	1.0		1.0	1.0		1.0	1.0	
Lost Time Adjust (s)	0.0	0.0			0.0		0.0	0.0		0.0	0.0	
Total Lost Time (s)	4.0	4.0			4.0		4.5	4.5		4.0	4.5	
Lead/Lag	Lag	Lag		Lead	Lead		Lead	Lag		Lead	Lag	
Lead-Lag Optimize?	Yes	Yes		Yes	Yes		Yes	Yes		Yes	Yes	
Vehicle Extension (s)	3.0	3.0		3.0	3.0		3.0	3.0		3.0	3.0	
Recall Mode	None	None		None	None		None	Min		None	Min	
Walk Time (s)								7.0			7.0	
Flash Dont Walk (s)								11.0			11.0	
Pedestrian Calls (#/hr)								0			0	
Act Effct Green (s)	10.8	10.8	25.1		6.5		30.7	29.4		23.3	16.4	30.8
Actuated g/C Ratio	0.21	0.21	0.48		0.12		0.59	0.56		0.45	0.31	0.59
v/c Ratio	0.42	0.42	0.27		0.09		0.37	0.29		0.01	0.61	0.30
Control Delay	24.2	24.3	3.0		24.4		8.8	8.8		7.5	18.5	1.3
Queue Delay	0.0	0.0	0.0		0.0		0.0	0.0		0.0	0.0	0.0

Lane Group	Ø3
Lane Configurations	
Traffic Volume (vph)	
Future Volume (vph)	
Ideal Flow (vphpl)	
Storage Length (ft)	
Storage Lanes	
Taper Length (ft)	
Lane Util. Factor	
Frt	
Flt Protected	
Satd. Flow (prot)	
Flt Permitted	
Satd. Flow (perm)	
Right Turn on Red	
Satd. Flow (RTOR)	
Link Speed (mph)	
Link Distance (ft)	
Travel Time (s)	
Peak Hour Factor	
Heavy Vehicles (%)	
Adj. Flow (vph)	
Shared Lane Traffic (%)	
Lane Group Flow (vph)	
Turn Type	
Protected Phases	3
Permitted Phases	
Detector Phase	
Switch Phase	
Minimum Initial (s)	5.0
Minimum Split (s)	29.5
Total Split (s)	25.0
Total Split (%)	23%
Maximum Green (s)	20.5
Yellow Time (s)	3.5
All-Red Time (s)	1.0
Lost Time Adjust (s)	
Total Lost Time (s)	
Lead/Lag	
Lead-Lag Optimize?	
Vehicle Extension (s)	3.0
Recall Mode	None
Walk Time (s)	4.0
Flash Dont Walk (s)	21.0
Pedestrian Calls (#/hr)	0
Act Effct Green (s)	
Actuated g/C Ratio	
v/c Ratio	
Control Delay	
Queue Delay	

Lane Group	EBL	EBT	EBR	WBL	WBT	WBR	NBL	NBT	NBR	SBL	SBT	SBR
Total Delay	24.2	24.3	3.0		24.4		8.8	8.8		7.5	18.5	1.3
LOS	C	C	A		C		A	A		A	B	A
Approach Delay		14.7			24.4			8.8			13.1	
Approach LOS		B			C			A			B	
Queue Length 50th (ft)	36	37	0		4		18	31		0	82	0
Queue Length 95th (ft)	115	116	39		27		82	146		5	196	14
Internal Link Dist (ft)		109			55			576			294	
Turn Bay Length (ft)							315			200		
Base Capacity (vph)	864	870	960		368		522	2010		1003	1802	1430
Starvation Cap Reductn	0	0	0		0		0	0		0	0	0
Spillback Cap Reductn	0	0	0		0		0	0		0	0	0
Storage Cap Reductn	0	0	0		0		0	0		0	0	0
Reduced v/c Ratio	0.17	0.17	0.25		0.06		0.36	0.29		0.00	0.38	0.22

Intersection Summary	
Area Type: Other	
Cycle Length: 111	
Actuated Cycle Length: 52.2	
Natural Cycle: 90	
Control Type: Actuated-Uncoordinated	
Maximum v/c Ratio: 0.61	
Intersection Signal Delay: 12.2	Intersection LOS: B
Intersection Capacity Utilization 49.8%	ICU Level of Service A
Analysis Period (min) 15	

Splits and Phases: 4: New Park Ave. & West Hartford Place/Private Dr.

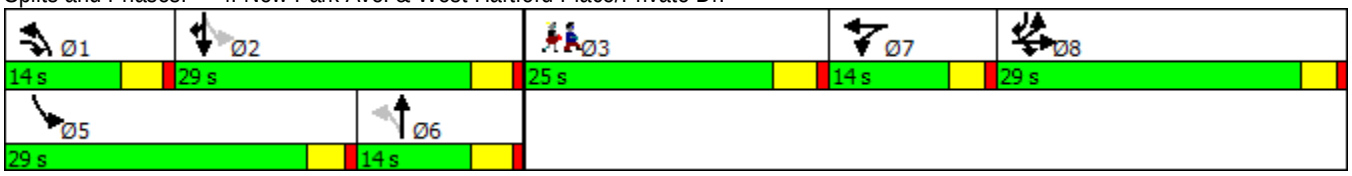

Lane Group	Ø3
Total Delay	
LOS	
Approach Delay	
Approach LOS	
Queue Length 50th (ft)	
Queue Length 95th (ft)	
Internal Link Dist (ft)	
Turn Bay Length (ft)	
Base Capacity (vph)	
Starvation Cap Reductn	
Spillback Cap Reductn	
Storage Cap Reductn	
Reduced v/c Ratio	

Intersection Summary

Movement	EBL	EBT	EBR	WBL	WBT	WBR	NBL	NBT	NBR	SBL	SBT	SBR
Lane Configurations												
Traffic Volume (vph)	263	8	221	11	4	5	172	517	10	4	633	293
Future Volume (vph)	263	8	221	11	4	5	172	517	10	4	633	293
Ideal Flow (vphpl)	1900	1900	1900	1900	1900	1900	1900	1900	1900	1900	1900	1900
Total Lost time (s)	4.0	4.0	4.0		4.0		4.5	4.5		4.0	4.5	4.5
Lane Util. Factor	0.95	0.95	1.00		1.00		1.00	0.95		1.00	0.95	1.00
Frt	1.00	1.00	0.85		0.97		1.00	1.00		1.00	1.00	0.85
Flt Protected	0.95	0.96	1.00		0.97		0.95	1.00		0.95	1.00	1.00
Satd. Flow (prot)	1698	1708	1583		1788		1787	3565		1805	3610	1583
Flt Permitted	0.95	0.96	1.00		0.97		0.24	1.00		0.44	1.00	1.00
Satd. Flow (perm)	1698	1708	1583		1788		445	3565		829	3610	1583
Peak-hour factor, PHF	0.92	0.92	0.92	0.92	0.92	0.92	0.92	0.92	0.92	0.92	0.92	0.92
Adj. Flow (vph)	286	9	240	12	4	5	187	562	11	4	688	318
RTOR Reduction (vph)	0	0	140	0	5	0	0	0	0	0	0	150
Lane Group Flow (vph)	146	149	100	0	16	0	187	573	0	4	688	168
Heavy Vehicles (%)	1%	0%	2%	0%	0%	0%	1%	1%	0%	0%	0%	2%
Turn Type	Split	NA	pt+ov	Split	NA		pm+pt	NA		pm+pt	NA	pt+ov
Protected Phases	8	8	8 1	7	7		1	6		5	2	2 8
Permitted Phases							6			2		
Actuated Green, G (s)	10.8	10.8	24.4		1.0		34.2	29.4		20.9	20.1	30.9
Effective Green, g (s)	10.8	10.8	24.4		1.0		34.2	29.4		20.9	20.1	30.9
Actuated g/C Ratio	0.18	0.18	0.42		0.02		0.58	0.50		0.36	0.34	0.53
Clearance Time (s)	4.0	4.0			4.0		4.5	4.5		4.0	4.5	
Vehicle Extension (s)	3.0	3.0			3.0		3.0	3.0		3.0	3.0	
Lane Grp Cap (vph)	313	315	660		30		480	1791		309	1240	836
v/s Ratio Prot	0.09	c0.09	0.06		c0.01		c0.06	0.16		0.00	c0.19	0.11
v/s Ratio Perm							0.16			0.00		
v/c Ratio	0.47	0.47	0.15		0.54		0.39	0.32		0.01	0.55	0.20
Uniform Delay, d1	21.3	21.3	10.6		28.5		6.7	8.6		12.1	15.6	7.3
Progression Factor	1.00	1.00	1.00		1.00		1.00	1.00		1.00	1.00	1.00
Incremental Delay, d2	1.1	1.1	0.1		17.2		0.5	0.1		0.0	0.5	0.1
Delay (s)	22.4	22.4	10.7		45.7		7.2	8.7		12.1	16.1	7.4
Level of Service	C	C	B		D		A	A		B	B	A
Approach Delay (s)		17.2			45.7			8.4			13.4	
Approach LOS		B			D			A			B	

Intersection Summary			
HCM 2000 Control Delay	12.9	HCM 2000 Level of Service	B
HCM 2000 Volume to Capacity ratio	0.56		
Actuated Cycle Length (s)	58.5	Sum of lost time (s)	21.5
Intersection Capacity Utilization	49.8%	ICU Level of Service	A
Analysis Period (min)	15		
c Critical Lane Group			

Lane Group	EBL	EBT	EBR	WBL	WBT	WBR	NBL	NBT	NBR	SBL	SBT	SBR
Lane Configurations												
Traffic Volume (vph)	25	190	141	268	293	360	192	412	231	332	562	26
Future Volume (vph)	25	190	141	268	293	360	192	412	231	332	562	26
Ideal Flow (vphpl)	1900	1900	1900	1900	1900	1900	1900	1900	1900	1900	1900	1900
Storage Length (ft)	50		0	0		0	150		0	410		0
Storage Lanes	1		1	1		1	1		0	1		0
Taper Length (ft)	25			25			25			25		
Lane Util. Factor	1.00	1.00	1.00	1.00	1.00	1.00	1.00	0.95	0.95	1.00	0.95	0.95
Frt			0.850			0.850		0.945			0.990	
Flt Protected	0.950			0.950			0.950			0.950		
Satd. Flow (prot)	1805	1881	1599	1752	1881	1615	1787	3365	0	1805	3509	0
Flt Permitted	0.296			0.217			0.408			0.950		
Satd. Flow (perm)	562	1881	1599	400	1881	1615	768	3365	0	1805	3509	0
Right Turn on Red			Yes			Yes			Yes			Yes
Satd. Flow (RTOR)			164			404		93			6	
Link Speed (mph)		30			30			30			30	
Link Distance (ft)		282			376			408			1063	
Travel Time (s)		6.4			8.5			9.3			24.2	
Peak Hour Factor	0.69	0.85	0.86	0.91	0.84	0.89	0.79	0.84	0.81	0.89	0.94	0.59
Heavy Vehicles (%)	0%	1%	1%	3%	1%	0%	1%	1%	2%	0%	2%	0%
Adj. Flow (vph)	36	224	164	295	349	404	243	490	285	373	598	44
Shared Lane Traffic (%)												
Lane Group Flow (vph)	36	224	164	295	349	404	243	775	0	373	642	0
Turn Type	pm+pt	NA	Perm	pm+pt	NA	custom	pm+pt	NA		Prot	NA	
Protected Phases	7	4		3	8	8	1	6		5	2	
Permitted Phases	4		4	8		5	6					
Detector Phase	7	4	4	3	8	8	1	6		5	2	
Switch Phase												
Minimum Initial (s)	5.0	9.0	9.0	5.0	9.0	9.0	6.0	15.0		6.0	15.0	
Minimum Split (s)	9.5	14.0	14.0	9.5	14.0	14.0	10.5	20.1		10.5	20.1	
Total Split (s)	19.0	22.0	22.0	19.0	22.0	22.0	14.0	35.0		14.0	35.0	
Total Split (%)	15.8%	18.3%	18.3%	15.8%	18.3%	18.3%	11.7%	29.2%		11.7%	29.2%	
Maximum Green (s)	14.5	17.0	17.0	15.0	17.0	17.0	10.0	29.9		10.0	29.9	
Yellow Time (s)	3.5	3.0	3.0	3.0	3.0	3.0	3.0	3.6		3.0	3.6	
All-Red Time (s)	1.0	2.0	2.0	1.0	2.0	2.0	1.0	1.5		1.0	1.5	
Lost Time Adjust (s)	0.0	0.0	0.0	0.0	0.0	0.0	0.0	0.0		0.0	0.0	
Total Lost Time (s)	4.5	5.0	5.0	4.0	5.0	5.0	4.0	5.1		4.0	5.1	
Lead/Lag	Lead	Lag	Lag	Lead	Lag	Lag	Lead	Lag		Lead	Lag	
Lead-Lag Optimize?	Yes	Yes	Yes	Yes	Yes	Yes	Yes				Yes	
Vehicle Extension (s)	3.0	2.0	2.0	2.0	2.0	2.0	2.0	2.0		2.0	2.0	
Recall Mode	None	C-Max	C-Max	None	C-Max	C-Max	None	Max		None	Max	
Act Effct Green (s)	24.7	17.0	17.0	37.0	28.4	71.4	49.9	30.9		39.0	52.0	
Actuated g/C Ratio	0.21	0.14	0.14	0.31	0.24	0.60	0.42	0.26		0.32	0.43	
v/c Ratio	0.19	0.84	0.45	1.01	0.78	0.36	0.52	0.83		0.64	0.42	
Control Delay	32.7	77.1	11.1	92.4	57.9	2.3	17.7	45.4		40.7	24.7	
Queue Delay	0.0	0.0	0.0	0.0	0.0	0.0	0.0	0.0		0.0	0.0	
Total Delay	32.7	77.1	11.1	92.4	57.9	2.3	17.7	45.4		40.7	24.7	
LOS	C	E	B	F	E	A	B	D		D	C	
Approach Delay		47.8			46.2			38.7			30.6	

Lane Group	Ø9
Lane Configurations	
Traffic Volume (vph)	
Future Volume (vph)	
Ideal Flow (vphpl)	
Storage Length (ft)	
Storage Lanes	
Taper Length (ft)	
Lane Util. Factor	
Frt	
Flt Protected	
Satd. Flow (prot)	
Flt Permitted	
Satd. Flow (perm)	
Right Turn on Red	
Satd. Flow (RTOR)	
Link Speed (mph)	
Link Distance (ft)	
Travel Time (s)	
Peak Hour Factor	
Heavy Vehicles (%)	
Adj. Flow (vph)	
Shared Lane Traffic (%)	
Lane Group Flow (vph)	
Turn Type	
Protected Phases	9
Permitted Phases	
Detector Phase	
Switch Phase	
Minimum Initial (s)	5.0
Minimum Split (s)	9.5
Total Split (s)	30.0
Total Split (%)	25%
Maximum Green (s)	25.5
Yellow Time (s)	3.5
All-Red Time (s)	1.0
Lost Time Adjust (s)	
Total Lost Time (s)	
Lead/Lag	
Lead-Lag Optimize?	
Vehicle Extension (s)	3.0
Recall Mode	None
Act Effct Green (s)	
Actuated g/C Ratio	
v/c Ratio	
Control Delay	
Queue Delay	
Total Delay	
LOS	
Approach Delay	

Lane Group	EBL	EBT	EBR	WBL	WBT	WBR	NBL	NBT	NBR	SBL	SBT	SBR
Approach LOS		D			D			D			C	
Queue Length 50th (ft)	20	171	0	~192	267	0	76	270		242	175	
Queue Length 95th (ft)	35	#277	54	#359	#418	45	99	303		357	236	
Internal Link Dist (ft)		202			296			328			983	
Turn Bay Length (ft)	50						150			410		
Base Capacity (vph)	300	266	367	292	445	1124	471	936		586	1523	
Starvation Cap Reductn	0	0	0	0	0	0	0	0		0	0	
Spillback Cap Reductn	0	0	0	0	0	0	0	0		0	0	
Storage Cap Reductn	0	0	0	0	0	0	0	0		0	0	
Reduced v/c Ratio	0.12	0.84	0.45	1.01	0.78	0.36	0.52	0.83		0.64	0.42	

Intersection Summary

Area Type: Other
Cycle Length: 120
Actuated Cycle Length: 120
Offset: 41.1 (34%), Referenced to phase 4:EBTL and 8:WBTL, Start of Yellow
Natural Cycle: 90
Control Type: Actuated-Coordinated
Maximum v/c Ratio: 1.01
Intersection Signal Delay: 39.7 Intersection LOS: D
Intersection Capacity Utilization 77.1% ICU Level of Service D
Analysis Period (min) 15

~ Volume exceeds capacity, queue is theoretically infinite.
Queue shown is maximum after two cycles.

95th percentile volume exceeds capacity, queue may be longer.
Queue shown is maximum after two cycles.

Splits and Phases: 5: New Park Ave. & Flatbush Ave./Flatbush Ave.

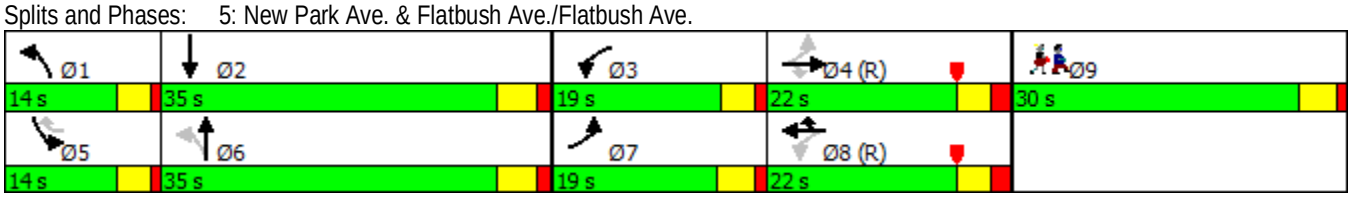

Lane Group	Ø9
Approach LOS	
Queue Length 50th (ft)	
Queue Length 95th (ft)	
Internal Link Dist (ft)	
Turn Bay Length (ft)	
Base Capacity (vph)	
Starvation Cap Reductn	
Spillback Cap Reductn	
Storage Cap Reductn	
Reduced v/c Ratio	

Intersection Summary

Movement	EBL	EBT	EBR	WBL	WBT	WBR	NBL	NBT	NBR	SBL	SBT	SBR
Lane Configurations												
Traffic Volume (vph)	25	190	141	268	293	360	192	412	231	332	562	26
Future Volume (vph)	25	190	141	268	293	360	192	412	231	332	562	26
Ideal Flow (vphpl)	1900	1900	1900	1900	1900	1900	1900	1900	1900	1900	1900	1900
Total Lost time (s)	4.5	5.0	5.0	4.0	5.0	5.0	4.0	5.1		4.0	5.1	
Lane Util. Factor	1.00	1.00	1.00	1.00	1.00	1.00	1.00	0.95		1.00	0.95	
Frt	1.00	1.00	0.85	1.00	1.00	0.85	1.00	0.94		1.00	0.99	
Flt Protected	0.95	1.00	1.00	0.95	1.00	1.00	0.95	1.00		0.95	1.00	
Satd. Flow (prot)	1805	1881	1599	1752	1881	1615	1787	3365		1805	3508	
Flt Permitted	0.30	1.00	1.00	0.22	1.00	1.00	0.41	1.00		0.95	1.00	
Satd. Flow (perm)	563	1881	1599	400	1881	1615	768	3365		1805	3508	
Peak-hour factor, PHF	0.69	0.85	0.86	0.91	0.84	0.89	0.79	0.84	0.81	0.89	0.94	0.59
Adj. Flow (vph)	36	224	164	295	349	404	243	490	285	373	598	44
RTOR Reduction (vph)	0	0	141	0	0	183	0	69	0	0	3	0
Lane Group Flow (vph)	36	224	23	295	349	221	243	706	0	373	639	0
Heavy Vehicles (%)	0%	1%	1%	3%	1%	0%	1%	1%	2%	0%	2%	0%
Turn Type	pm+pt	NA	Perm	pm+pt	NA	custom	pm+pt	NA		Prot	NA	
Protected Phases	7	4		3	8	8	1	6		5	2	
Permitted Phases	4		4	8		5	6					
Actuated Green, G (s)	21.9	17.0	17.0	36.0	26.6	65.6	48.8	30.9		39.0	52.0	
Effective Green, g (s)	21.9	17.0	17.0	36.0	26.6	65.6	48.8	30.9		39.0	52.0	
Actuated g/C Ratio	0.18	0.14	0.14	0.30	0.22	0.55	0.41	0.26		0.32	0.43	
Clearance Time (s)	4.5	5.0	5.0	4.0	5.0	5.0	4.0	5.1		4.0	5.1	
Vehicle Extension (s)	3.0	2.0	2.0	2.0	2.0	2.0	2.0	2.0		2.0	2.0	
Lane Grp Cap (vph)	153	266	226	289	416	950	464	866		586	1520	
v/s Ratio Prot	0.01	0.12		c0.13	0.19	0.05	0.08	c0.21		c0.21	0.18	
v/s Ratio Perm	0.03		0.01	c0.18		0.09	0.13					
v/c Ratio	0.24	0.84	0.10	1.02	0.84	0.23	0.52	0.82		0.64	0.42	
Uniform Delay, d1	41.2	50.2	44.9	37.5	44.7	14.1	24.4	41.9		34.5	23.6	
Progression Factor	1.00	1.00	1.00	1.00	1.00	1.00	1.00	1.00		1.00	1.00	
Incremental Delay, d2	0.8	26.3	0.9	58.4	18.0	0.0	0.5	8.3		1.7	0.9	
Delay (s)	42.0	76.5	45.8	95.9	62.7	14.2	24.9	50.2		36.1	24.4	
Level of Service	D	E	D	F	E	B	C	D		D	C	
Approach Delay (s)		61.7			53.3			44.2			28.7	
Approach LOS		E			D			D			C	

Intersection Summary			
HCM 2000 Control Delay	44.6	HCM 2000 Level of Service	D
HCM 2000 Volume to Capacity ratio	0.88		
Actuated Cycle Length (s)	120.0	Sum of lost time (s)	23.1
Intersection Capacity Utilization	77.1%	ICU Level of Service	D
Analysis Period (min)	15		
c Critical Lane Group			

Lane Group	EBL	EBT	EBR	WBL	WBT	WBR	NBL	NBT	NBR	SBL	SBT	SBR
Lane Configurations												
Traffic Volume (vph)	16	0	643	2	2	0	461	377	3	0	436	0
Future Volume (vph)	16	0	643	2	2	0	461	377	3	0	436	0
Ideal Flow (vphpl)	1900	1900	1900	1900	1900	1900	1900	1900	1900	1900	1900	1900
Storage Length (ft)	0		0	0		0	0		0	0		80
Storage Lanes	1		2	0		0	0		0	0		1
Taper Length (ft)	25			25			25			25		
Lane Util. Factor	1.00	1.00	0.88	1.00	1.00	1.00	0.95	0.95	0.95	0.95	0.95	1.00
Frt			0.850					0.999				
Flt Protected	0.950				0.976			0.975				
Satd. Flow (prot)	1805	0	2787	0	1854	0	0	3482	0	0	3574	1900
Flt Permitted	0.950				0.976			0.455				
Satd. Flow (perm)	1805	0	2787	0	1854	0	0	1625	0	0	3574	1900
Right Turn on Red			Yes			Yes			Yes			Yes
Satd. Flow (RTOR)			722									
Link Speed (mph)		30			30			30			30	
Link Distance (ft)		506			113			1063			446	
Travel Time (s)		11.5			2.6			24.2			10.1	
Peak Hour Factor	0.67	0.92	0.89	0.50	0.50	0.92	0.95	0.86	0.75	0.25	0.90	0.75
Heavy Vehicles (%)	0%	0%	2%	0%	0%	0%	1%	1%	0%	0%	1%	0%
Adj. Flow (vph)	24	0	722	4	4	0	485	438	4	0	484	0
Shared Lane Traffic (%)												
Lane Group Flow (vph)	24	0	722	0	8	0	0	927	0	0	484	0
Turn Type	Prot		custom	Split	NA		custom	NA			NA	Perm
Protected Phases	8		1 8	4	4		6!	1 6			2!	
Permitted Phases							1			2		2
Detector Phase	8		1 8	4	4		6	1 6		2	2	2
Switch Phase												
Minimum Initial (s)	10.0			5.0	5.0		15.0			15.0	15.0	15.0
Minimum Split (s)	15.0			24.1	24.1		21.3			21.3	21.3	21.3
Total Split (s)	30.0			21.0	21.0		68.0			36.0	36.0	36.0
Total Split (%)	21.2%			14.9%	14.9%		48.1%			25.5%	25.5%	25.5%
Maximum Green (s)	25.0			14.9	14.9		61.7			29.7	29.7	29.7
Yellow Time (s)	3.0			3.0	3.0		3.0			3.0	3.0	3.0
All-Red Time (s)	2.0			3.1	3.1		3.3			3.3	3.3	3.3
Lost Time Adjust (s)	0.0				0.0						0.0	0.0
Total Lost Time (s)	5.0				6.1						6.3	6.3
Lead/Lag										Lag	Lag	Lag
Lead-Lag Optimize?										Yes	Yes	Yes
Vehicle Extension (s)	2.0			2.0	2.0		3.0			3.0	3.0	3.0
Recall Mode	None			None	None		Max			None	None	None
Walk Time (s)												
Flash Dont Walk (s)												
Pedestrian Calls (#/hr)												
Act Effct Green (s)	10.0		40.1		5.2			61.2			29.8	
Actuated g/C Ratio	0.12		0.47		0.06			0.72			0.35	
v/c Ratio	0.11		0.43		0.07			0.37			0.39	
Control Delay	36.8		2.1		41.0			5.6			22.7	
Queue Delay	0.0		0.0		0.0			0.0			0.0	

Lane Group	Ø1	Ø9
Lane Configurations		
Traffic Volume (vph)		
Future Volume (vph)		
Ideal Flow (vphpl)		
Storage Length (ft)		
Storage Lanes		
Taper Length (ft)		
Lane Util. Factor		
Frt		
Flt Protected		
Satd. Flow (prot)		
Flt Permitted		
Satd. Flow (perm)		
Right Turn on Red		
Satd. Flow (RTOR)		
Link Speed (mph)		
Link Distance (ft)		
Travel Time (s)		
Peak Hour Factor		
Heavy Vehicles (%)		
Adj. Flow (vph)		
Shared Lane Traffic (%)		
Lane Group Flow (vph)		
Turn Type		
Protected Phases	1	9
Permitted Phases		
Detector Phase		
Switch Phase		
Minimum Initial (s)	5.0	5.0
Minimum Split (s)	12.0	22.0
Total Split (s)	32.0	22.4
Total Split (%)	23%	16%
Maximum Green (s)	25.0	18.4
Yellow Time (s)	3.0	4.0
All-Red Time (s)	4.0	0.0
Lost Time Adjust (s)		
Total Lost Time (s)		
Lead/Lag	Lead	
Lead-Lag Optimize?	Yes	
Vehicle Extension (s)	2.0	3.0
Recall Mode	None	None
Walk Time (s)		5.0
Flash Dont Walk (s)		12.0
Pedestrian Calls (#/hr)		0
Act Effct Green (s)		
Actuated g/C Ratio		
v/c Ratio		
Control Delay		
Queue Delay		

Lane Group	EBL	EBT	EBR	WBL	WBT	WBR	NBL	NBT	NBR	SBL	SBT	SBR
Total Delay	36.8		2.1		41.0			5.6			22.7	
LOS	D		A		D			A			C	
Approach Delay		3.2			41.0			5.6			22.7	
Approach LOS		A			D			A			C	
Queue Length 50th (ft)	11		0		4			74			96	
Queue Length 95th (ft)	28		33		11			155			167	
Internal Link Dist (ft)		426			33			983			366	
Turn Bay Length (ft)												
Base Capacity (vph)	529		1692		324			2495			1246	
Starvation Cap Reductn	0		0		0			0			0	
Spillback Cap Reductn	0		0		0			0			0	
Storage Cap Reductn	0		0		0			0			0	
Reduced v/c Ratio	0.05		0.43		0.02			0.37			0.39	

Intersection Summary	
Area Type: Other	
Cycle Length: 141.4	
Actuated Cycle Length: 85.4	
Natural Cycle: 95	
Control Type: Actuated-Uncoordinated	
Maximum v/c Ratio: 0.43	
Intersection Signal Delay: 8.8	Intersection LOS: A
Intersection Capacity Utilization 58.4%	ICU Level of Service B
Analysis Period (min) 15	

! Phase conflict between lane groups.

Splits and Phases: 6: New Park Ave. & Prospect Ave./Private Dr.

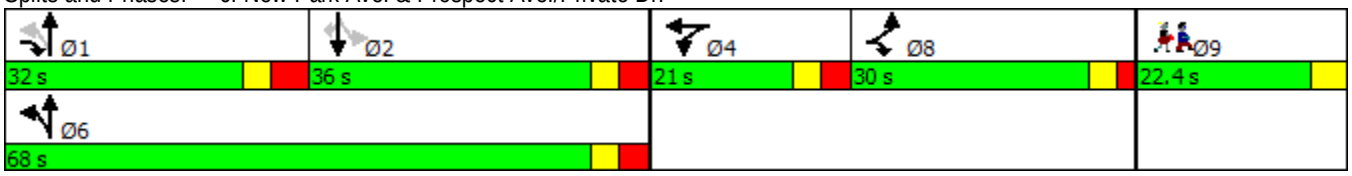

Lane Group	Ø1	Ø9
Total Delay		
LOS		
Approach Delay		
Approach LOS		
Queue Length 50th (ft)		
Queue Length 95th (ft)		
Internal Link Dist (ft)		
Turn Bay Length (ft)		
Base Capacity (vph)		
Starvation Cap Reductn		
Spillback Cap Reductn		
Storage Cap Reductn		
Reduced v/c Ratio		

Intersection Summary

Movement	EBL	EBT	EBR	WBL	WBT	WBR	NBL	NBT	NBR	SBL	SBT	SBR
Lane Configurations												
Traffic Volume (vph)	16	0	643	2	2	0	461	377	3	0	436	0
Future Volume (vph)	16	0	643	2	2	0	461	377	3	0	436	0
Ideal Flow (vphpl)	1900	1900	1900	1900	1900	1900	1900	1900	1900	1900	1900	1900
Total Lost time (s)	5.0		7.0		6.1			7.0			6.3	
Lane Util. Factor	1.00		0.88		1.00			0.95			0.95	
Frt	1.00		0.85		1.00			1.00			1.00	
Flt Protected	0.95		1.00		0.98			0.97			1.00	
Satd. Flow (prot)	1805		2787		1854			3481			3574	
Flt Permitted	0.95		1.00		0.98			0.46			1.00	
Satd. Flow (perm)	1805		2787		1854			1625			3574	
Peak-hour factor, PHF	0.67	0.92	0.89	0.50	0.50	0.92	0.95	0.86	0.75	0.25	0.90	0.75
Adj. Flow (vph)	24	0	722	4	4	0	485	438	4	0	484	0
RTOR Reduction (vph)	0	0	441	0	0	0	0	0	0	0	0	0
Lane Group Flow (vph)	24	0	281	0	8	0	0	927	0	0	484	0
Heavy Vehicles (%)	0%	0%	2%	0%	0%	0%	1%	1%	0%	0%	1%	0%
Turn Type	Prot		custom	Split	NA		custom	NA			NA	Perm
Protected Phases	8		1 8	4	4		6!	1 6			2!	
Permitted Phases							1			2		2
Actuated Green, G (s)	10.0		40.1		1.0			61.9			29.8	
Effective Green, g (s)	10.0		35.1		1.0			61.9			29.8	
Actuated g/C Ratio	0.11		0.39		0.01			0.69			0.33	
Clearance Time (s)	5.0				6.1						6.3	
Vehicle Extension (s)	2.0				2.0						3.0	
Lane Grp Cap (vph)	199		1083		20			2386			1179	
v/s Ratio Prot	0.01		c0.10		c0.00			c0.27			0.14	
v/s Ratio Perm												
v/c Ratio	0.12		0.26		0.40			0.39			0.41	
Uniform Delay, d1	36.2		18.8		44.4			6.1			23.4	
Progression Factor	1.00		1.00		1.00			1.00			1.00	
Incremental Delay, d2	0.1		0.0		4.7			0.0			0.2	
Delay (s)	36.3		18.8		49.1			6.1			23.7	
Level of Service	D		B		D			A			C	
Approach Delay (s)		19.4			49.1			6.1			23.7	
Approach LOS		B			D			A			C	

Intersection Summary			
HCM 2000 Control Delay	14.8	HCM 2000 Level of Service	B
HCM 2000 Volume to Capacity ratio	0.44		
Actuated Cycle Length (s)	90.3	Sum of lost time (s)	28.4
Intersection Capacity Utilization	58.4%	ICU Level of Service	B
Analysis Period (min)	15		

! Phase conflict between lane groups.
c Critical Lane Group

Lane Group	EBL	EBT	EBR	WBL	WBT	WBR	NBL	NBT	NBR	SBL	SBT	SBR
Lane Configurations												
Traffic Volume (vph)	277	623	0	1	695	382	0	0	0	326	2	261
Future Volume (vph)	277	623	0	1	695	382	0	0	0	326	2	261
Ideal Flow (vphpl)	1900	1900	1900	1900	1900	1900	1900	1900	1900	1900	1900	1900
Lane Width (ft)	10	10	12	12	12	12	12	12	12	11	12	11
Lane Util. Factor	1.00	0.95	0.95	0.95	0.95	1.00	1.00	1.00	1.00	0.95	0.95	1.00
Frt						0.850					0.869	
Flt Protected	0.950									0.950	0.994	
Satd. Flow (prot)	1668	3336	0	0	3565	1599	0	1900	0	1625	1524	0
Flt Permitted	0.208				0.952					0.950	0.994	
Satd. Flow (perm)	365	3336	0	0	3394	1599	0	1900	0	1625	1524	0
Right Turn on Red			Yes			No			Yes			Yes
Satd. Flow (RTOR)											278	
Link Speed (mph)		30			30			30			30	
Link Distance (ft)		386			245			138			2131	
Travel Time (s)		8.8			5.6			3.1			48.4	
Peak Hour Factor	0.92	0.95	0.75	0.25	0.91	0.86	0.25	0.25	0.25	0.89	0.50	0.91
Heavy Vehicles (%)	1%	1%	67%	50%	1%	1%	0%	0%	33%	2%	100%	1%
Adj. Flow (vph)	301	656	0	4	764	444	0	0	0	366	4	287
Shared Lane Traffic (%)										10%		
Lane Group Flow (vph)	301	656	0	0	768	444	0	0	0	329	328	0
Turn Type	D.P+P	NA		Perm	NA	pt+ov				Split	NA	
Protected Phases	1	1 2			2	2 4	5	5		4	4	
Permitted Phases	2			2								
Detector Phase	1	1 2		2	2	2 4	5	5		4	4	
Switch Phase												
Minimum Initial (s)	5.0			15.0	15.0		5.0	5.0		5.0	5.0	
Minimum Split (s)	9.5			20.5	20.5		9.5	9.5		10.5	10.5	
Total Split (s)	14.0			30.0	30.0		15.0	15.0		41.0	41.0	
Total Split (%)	11.1%			23.8%	23.8%		11.9%	11.9%		32.5%	32.5%	
Maximum Green (s)	9.5			24.5	24.5		10.5	10.5		35.5	35.5	
Yellow Time (s)	3.0			3.0	3.0		3.0	3.0		3.0	3.0	
All-Red Time (s)	1.5			2.5	2.5		1.5	1.5		2.5	2.5	
Lost Time Adjust (s)	0.0				0.0			0.0		0.0	0.0	
Total Lost Time (s)	4.5				5.5			4.5		5.5	5.5	
Lead/Lag	Lead			Lag	Lag					Lag	Lag	
Lead-Lag Optimize?	Yes			Yes	Yes					Yes	Yes	
Vehicle Extension (s)	1.5			2.5	2.5		1.5	1.5		1.5	1.5	
Recall Mode	None			C-Max	C-Max		None	None		None	None	
Walk Time (s)												
Flash Dont Walk (s)												
Pedestrian Calls (#/hr)												
Act Effct Green (s)	80.5	85.0			43.4	79.9				31.0	31.0	
Actuated g/C Ratio	0.64	0.67			0.34	0.63				0.25	0.25	
v/c Ratio	0.50	0.29			0.66	0.44				0.82	0.56	
Control Delay	15.3	9.6			38.0	12.5				61.4	10.7	
Queue Delay	0.0	0.0			0.0	0.0				0.0	0.0	
Total Delay	15.3	9.6			38.0	12.5				61.4	10.7	
LOS	B	A			D	B				E	B	

Lane Group	Ø3
Lane Configurations	
Traffic Volume (vph)	
Future Volume (vph)	
Ideal Flow (vphpl)	
Lane Width (ft)	
Lane Util. Factor	
Frt	
Flt Protected	
Satd. Flow (prot)	
Flt Permitted	
Satd. Flow (perm)	
Right Turn on Red	
Satd. Flow (RTOR)	
Link Speed (mph)	
Link Distance (ft)	
Travel Time (s)	
Peak Hour Factor	
Heavy Vehicles (%)	
Adj. Flow (vph)	
Shared Lane Traffic (%)	
Lane Group Flow (vph)	
Turn Type	
Protected Phases	3
Permitted Phases	
Detector Phase	
Switch Phase	
Minimum Initial (s)	7.0
Minimum Split (s)	33.5
Total Split (s)	26.0
Total Split (%)	21%
Maximum Green (s)	18.5
Yellow Time (s)	3.5
All-Red Time (s)	4.0
Lost Time Adjust (s)	
Total Lost Time (s)	
Lead/Lag	Lead
Lead-Lag Optimize?	Yes
Vehicle Extension (s)	3.0
Recall Mode	None
Walk Time (s)	7.0
Flash Dont Walk (s)	19.0
Pedestrian Calls (#/hr)	0
Act Effct Green (s)	
Actuated g/C Ratio	
v/c Ratio	
Control Delay	
Queue Delay	
Total Delay	
LOS	

Lane Group	EBL	EBT	EBR	WBL	WBT	WBR	NBL	NBT	NBR	SBL	SBT	SBR
Approach Delay		11.4			28.7						36.1	
Approach LOS		B			C						D	
Queue Length 50th (ft)	89	103			257	148				269	33	
Queue Length 95th (ft)	204	171			361	187				341	0	
Internal Link Dist (ft)		306			165			58			2051	
Turn Bay Length (ft)												
Base Capacity (vph)	606	2251			1169	1085				472	640	
Starvation Cap Reductn	0	0			0	0				0	0	
Spillback Cap Reductn	0	0			0	0				0	0	
Storage Cap Reductn	0	0			0	0				0	0	
Reduced v/c Ratio	0.50	0.29			0.66	0.41				0.70	0.51	

Intersection Summary

Area Type: Other
Cycle Length: 126
Actuated Cycle Length: 126
Offset: 0 (0%), Referenced to phase 2:EBWB, Start of Yellow
Natural Cycle: 135
Control Type: Actuated-Coordinated
Maximum v/c Ratio: 0.82
Intersection Signal Delay: 24.5 Intersection LOS: C
Intersection Capacity Utilization 66.5% ICU Level of Service C
Analysis Period (min) 15

Splits and Phases: 1: New Park Ave. & New Britain Ave.

Lane Group	Ø3
Approach Delay	
Approach LOS	
Queue Length 50th (ft)	
Queue Length 95th (ft)	
Internal Link Dist (ft)	
Turn Bay Length (ft)	
Base Capacity (vph)	
Starvation Cap Reductn	
Spillback Cap Reductn	
Storage Cap Reductn	
Reduced v/c Ratio	

Intersection Summary

Movement	EBL	EBT	EBR	WBL	WBT	WBR	NBL	NBT	NBR	SBL	SBT	SBR
Lane Configurations												
Traffic Volume (vph)	277	623	0	1	695	382	0	0	0	326	2	261
Future Volume (vph)	277	623	0	1	695	382	0	0	0	326	2	261
Ideal Flow (vphpl)	1900	1900	1900	1900	1900	1900	1900	1900	1900	1900	1900	1900
Lane Width	10	10	12	12	12	12	12	12	12	11	12	11
Total Lost time (s)	4.5	4.5			5.5	5.5				5.5	5.5	
Lane Util. Factor	1.00	0.95			0.95	1.00				0.95	0.95	
Frt	1.00	1.00			1.00	0.85				1.00	0.87	
Flt Protected	0.95	1.00			1.00	1.00				0.95	0.99	
Satd. Flow (prot)	1668	3336			3564	1599				1625	1524	
Flt Permitted	0.21	1.00			0.95	1.00				0.95	0.99	
Satd. Flow (perm)	364	3336			3394	1599				1625	1524	
Peak-hour factor, PHF	0.92	0.95	0.75	0.25	0.91	0.86	0.25	0.25	0.25	0.89	0.50	0.91
Adj. Flow (vph)	301	656	0	4	764	444	0	0	0	366	4	287
RTOR Reduction (vph)	0	0	0	0	0	0	0	0	0	0	210	0
Lane Group Flow (vph)	301	656	0	0	768	444	0	0	0	329	118	0
Heavy Vehicles (%)	1%	1%	67%	50%	1%	1%	0%	0%	33%	2%	100%	1%
Turn Type	D.P+P	NA		Perm	NA	pt+ov				Split	NA	
Protected Phases	1	1 2			2	2 4	5	5		4	4	
Permitted Phases	2			2								
Actuated Green, G (s)	79.5	84.0			43.4	79.9				31.0	31.0	
Effective Green, g (s)	79.5	84.0			43.4	79.9				31.0	31.0	
Actuated g/C Ratio	0.63	0.67			0.34	0.63				0.25	0.25	
Clearance Time (s)	4.5				5.5					5.5	5.5	
Vehicle Extension (s)	1.5				2.5					1.5	1.5	
Lane Grp Cap (vph)	603	2224			1169	1013				399	374	
v/s Ratio Prot	c0.14	0.20				0.28				c0.20	0.08	
v/s Ratio Perm	0.17				c0.23							
v/c Ratio	0.50	0.29			0.66	0.44				0.82	0.32	
Uniform Delay, d1	13.0	8.7			35.0	11.7				44.9	38.8	
Progression Factor	1.00	1.00			1.00	1.00				1.00	1.00	
Incremental Delay, d2	0.2	0.0			2.9	0.1				12.4	0.2	
Delay (s)	13.3	8.7			37.9	11.8				57.3	39.0	
Level of Service	B	A			D	B				E	D	
Approach Delay (s)		10.2			28.3			0.0			48.2	
Approach LOS		B			C			A			D	

Intersection Summary			
HCM 2000 Control Delay	26.8	HCM 2000 Level of Service	C
HCM 2000 Volume to Capacity ratio	0.73		
Actuated Cycle Length (s)	126.0	Sum of lost time (s)	27.5
Intersection Capacity Utilization	66.5%	ICU Level of Service	C
Analysis Period (min)	15		

c Critical Lane Group

Lane Group	EBL	EBR	NBL	NBT	SBT	SBR
Lane Configurations						
Traffic Volume (vph)	150	87	81	591	579	212
Future Volume (vph)	150	87	81	591	579	212
Ideal Flow (vphpl)	1900	1900	1900	1900	1900	1900
Lane Util. Factor	1.00	1.00	0.95	0.95	0.95	1.00
Frt		0.850				0.850
Flt Protected	0.950			0.994		
Satd. Flow (prot)	1787	1615	0	3557	3574	1615
Flt Permitted	0.950			0.814		
Satd. Flow (perm)	1787	1615	0	2913	3574	1615
Right Turn on Red		Yes				Yes
Satd. Flow (RTOR)		113				241
Link Speed (mph)	30			30	30	
Link Distance (ft)	297			639	425	
Travel Time (s)	6.8			14.5	9.7	
Peak Hour Factor	0.94	0.77	0.88	0.81	0.88	0.88
Heavy Vehicles (%)	1%	0%	0%	1%	1%	0%
Adj. Flow (vph)	160	113	92	730	658	241
Shared Lane Traffic (%)						
Lane Group Flow (vph)	160	113	0	822	658	241
Turn Type	Prot	Prot	D.P+P	NA	NA	Perm
Protected Phases	4	4	1	1 2	2	
Permitted Phases			2			2
Detector Phase	4	4	1	1 2	2	2
Switch Phase						
Minimum Initial (s)	8.0	8.0	8.0		30.0	30.0
Minimum Split (s)	14.0	14.0	12.0		36.0	36.0
Total Split (s)	22.0	22.0	19.0		46.0	46.0
Total Split (%)	25.3%	25.3%	21.8%		52.9%	52.9%
Maximum Green (s)	16.0	16.0	15.0		40.0	40.0
Yellow Time (s)	4.0	4.0	3.0		4.0	4.0
All-Red Time (s)	2.0	2.0	1.0		2.0	2.0
Lost Time Adjust (s)	0.0	0.0			0.0	0.0
Total Lost Time (s)	6.0	6.0			6.0	6.0
Lead/Lag			Lead		Lag	Lag
Lead-Lag Optimize?			Yes		Yes	Yes
Vehicle Extension (s)	4.0	4.0	4.0		4.0	4.0
Recall Mode	None	None	None		Max	Max
Act Effct Green (s)	13.1	13.1		54.9	40.2	40.2
Actuated g/C Ratio	0.16	0.16		0.67	0.49	0.49
v/c Ratio	0.56	0.32		0.40	0.38	0.26
Control Delay	40.3	9.2		5.3	14.7	2.8
Queue Delay	0.0	0.0		0.0	0.0	0.0
Total Delay	40.3	9.2		5.3	14.7	2.8
LOS	D	A		A	B	A
Approach Delay	27.4			5.3	11.5	
Approach LOS	C			A	B	
Queue Length 50th (ft)	77	0		69	109	0
Queue Length 95th (ft)	141	28		90	158	35

Lane Group	EBL	EBR	NBL	NBT	SBT	SBR
Internal Link Dist (ft)	217			559	345	
Turn Bay Length (ft)						
Base Capacity (vph)	349	407		2133	1749	913
Starvation Cap Reductn	0	0		0	0	0
Spillback Cap Reductn	0	0		0	0	0
Storage Cap Reductn	0	0		0	0	0
Reduced v/c Ratio	0.46	0.28		0.39	0.38	0.26

Intersection Summary	
Area Type: Other	
Cycle Length: 87	
Actuated Cycle Length: 82.1	
Natural Cycle: 65	
Control Type: Actuated-Uncoordinated	
Maximum v/c Ratio: 0.56	
Intersection Signal Delay: 11.1	Intersection LOS: B
Intersection Capacity Utilization 65.3%	ICU Level of Service C
Analysis Period (min) 15	

Splits and Phases: 2: New Park Ave. & Talcott Rd.

Movement	EBL	EBR	NBL	NBT	SBT	SBR
Lane Configurations						
Traffic Volume (vph)	150	87	81	591	579	212
Future Volume (vph)	150	87	81	591	579	212
Ideal Flow (vphpl)	1900	1900	1900	1900	1900	1900
Total Lost time (s)	6.0	6.0		4.0	6.0	6.0
Lane Util. Factor	1.00	1.00		0.95	0.95	1.00
Frt	1.00	0.85		1.00	1.00	0.85
Flt Protected	0.95	1.00		0.99	1.00	1.00
Satd. Flow (prot)	1787	1615		3558	3574	1615
Flt Permitted	0.95	1.00		0.81	1.00	1.00
Satd. Flow (perm)	1787	1615		2914	3574	1615
Peak-hour factor, PHF	0.94	0.77	0.88	0.81	0.88	0.88
Adj. Flow (vph)	160	113	92	730	658	241
RTOR Reduction (vph)	0	95	0	0	0	123
Lane Group Flow (vph)	160	18	0	822	658	118
Heavy Vehicles (%)	1%	0%	0%	1%	1%	0%
Turn Type	Prot	Prot	D.P+P	NA	NA	Perm
Protected Phases	4	4	1	1 2	2	
Permitted Phases			2			2
Actuated Green, G (s)	13.1	13.1		52.9	40.2	40.2
Effective Green, g (s)	13.1	13.1		52.9	40.2	40.2
Actuated g/C Ratio	0.16	0.16		0.65	0.49	0.49
Clearance Time (s)	6.0	6.0			6.0	6.0
Vehicle Extension (s)	4.0	4.0			4.0	4.0
Lane Grp Cap (vph)	285	258		1979	1752	791
v/s Ratio Prot	c0.09	0.01		c0.06	0.18	
v/s Ratio Perm				c0.20		0.07
v/c Ratio	0.56	0.07		0.42	0.38	0.15
Uniform Delay, d1	31.8	29.3		7.1	13.1	11.5
Progression Factor	1.00	1.00		1.00	1.00	1.00
Incremental Delay, d2	3.1	0.2		0.2	0.6	0.4
Delay (s)	34.9	29.4		7.2	13.7	11.9
Level of Service	C	C		A	B	B
Approach Delay (s)	32.6			7.2	13.2	
Approach LOS	C			A	B	

Intersection Summary			
HCM 2000 Control Delay	13.4	HCM 2000 Level of Service	B
HCM 2000 Volume to Capacity ratio	0.44		
Actuated Cycle Length (s)	82.0	Sum of lost time (s)	16.0
Intersection Capacity Utilization	65.3%	ICU Level of Service	C
Analysis Period (min)	15		
c Critical Lane Group			

Lane Group	EBL	EBT	EBR	WBL	WBT	WBR	NBL	NBT	NBR	SBL	SBT	SBR
Lane Configurations												
Traffic Volume (vph)	3	0	2	48	0	121	1	713	48	139	847	3
Future Volume (vph)	3	0	2	48	0	121	1	713	48	139	847	3
Ideal Flow (vphpl)	1900	1900	1900	1900	1900	1900	1900	1900	1900	1900	1900	1900
Storage Length (ft)	0		0	0		0	0		0	249		0
Storage Lanes	0		0	0		1	0		0	1		0
Taper Length (ft)	25			25			25			25		
Lane Util. Factor	1.00	1.00	1.00	1.00	1.00	1.00	0.95	0.95	0.95	1.00	0.95	0.95
Frt		0.932				0.850		0.990			0.999	
Flt Protected		0.976			0.950					0.950		
Satd. Flow (prot)	0	1728	0	0	1736	1583	0	3564	0	1770	3606	0
Flt Permitted		0.804			0.870			0.954		0.283		
Satd. Flow (perm)	0	1424	0	0	1589	1583	0	3400	0	527	3606	0
Right Turn on Red			Yes			Yes			Yes			Yes
Satd. Flow (RTOR)		92				186		22			2	
Link Speed (mph)		30			30			30			30	
Link Distance (ft)		156			393			425			656	
Travel Time (s)		3.5			8.9			9.7			14.9	
Peak Hour Factor	0.75	0.38	0.47	0.66	0.50	0.65	0.50	0.86	0.80	0.90	0.78	0.50
Heavy Vehicles (%)	0%	0%	0%	4%	0%	2%	0%	0%	4%	2%	0%	0%
Adj. Flow (vph)	4	0	4	73	0	186	2	829	60	154	1086	6
Shared Lane Traffic (%)												
Lane Group Flow (vph)	0	8	0	0	73	186	0	891	0	154	1092	0
Turn Type	Perm	NA		Perm	NA	Perm	Perm	NA		pm+pt	NA	
Protected Phases		4			4			2		1	2	
Permitted Phases	4			4		4	2			2		
Detector Phase	4	4		4	4	4	2	2		1	2	
Switch Phase												
Minimum Initial (s)	8.0	8.0		8.0	8.0	8.0	8.0	8.0		5.0	8.0	
Minimum Split (s)	12.0	12.0		12.0	12.0	12.0	12.0	12.0		9.5	12.0	
Total Split (s)	10.5	10.5		10.5	10.5	10.5	45.0	45.0		10.0	45.0	
Total Split (%)	16.0%	16.0%		16.0%	16.0%	16.0%	68.7%	68.7%		15.3%	68.7%	
Maximum Green (s)	6.5	6.5		6.5	6.5	6.5	41.0	41.0		5.5	41.0	
Yellow Time (s)	3.0	3.0		3.0	3.0	3.0	3.0	3.0		3.5	3.0	
All-Red Time (s)	1.0	1.0		1.0	1.0	1.0	1.0	1.0		1.0	1.0	
Lost Time Adjust (s)		0.0			0.0	0.0		0.0		0.0	0.0	
Total Lost Time (s)		4.0			4.0	4.0		4.0		4.5	4.0	
Lead/Lag							Lag	Lag		Lead	Lag	
Lead-Lag Optimize?							Yes	Yes		Yes	Yes	
Vehicle Extension (s)	4.0	4.0		4.0	4.0	4.0	4.0	4.0		3.0	4.0	
Recall Mode	None	None		None	None	None	None	None		None	None	
Act Effct Green (s)		8.0			8.0	8.0		31.7		32.7	31.7	
Actuated g/C Ratio		0.16			0.16	0.16		0.65		0.67	0.65	
v/c Ratio		0.03			0.28	0.45		0.40		0.30	0.47	
Control Delay		0.2			28.3	9.3		6.8		3.9	7.4	
Queue Delay		0.0			0.0	0.0		0.0		0.0	0.0	
Total Delay		0.2			28.3	9.3		6.8		3.9	7.4	
LOS		A			C	A		A		A	A	
Approach Delay		0.2			14.7			6.8			7.0	

Lane Group	EBL	EBT	EBR	WBL	WBT	WBR	NBL	NBT	NBR	SBL	SBT	SBR
Approach LOS		A			B			A			A	
Queue Length 50th (ft)		0			21	0		78		11	104	
Queue Length 95th (ft)		0			35	16		103		20	116	
Internal Link Dist (ft)		76			313			345			576	
Turn Bay Length (ft)										249		
Base Capacity (vph)		310			260	415		2691		527	2849	
Starvation Cap Reductn		0			0	0		0		0	0	
Spillback Cap Reductn		0			0	0		0		0	0	
Storage Cap Reductn		0			0	0		0		0	0	
Reduced v/c Ratio		0.03			0.28	0.45		0.33		0.29	0.38	

Intersection Summary

Area Type: Other
Cycle Length: 65.5
Actuated Cycle Length: 48.8
Natural Cycle: 45
Control Type: Actuated-Uncoordinated
Maximum v/c Ratio: 0.47
Intersection Signal Delay: 7.7 — Intersection LOS: A
Intersection Capacity Utilization 61.4% — ICU Level of Service B
Analysis Period (min) 15

Splits and Phases: 3: New Park Ave. & Colt Dr./Oakwood Ave.

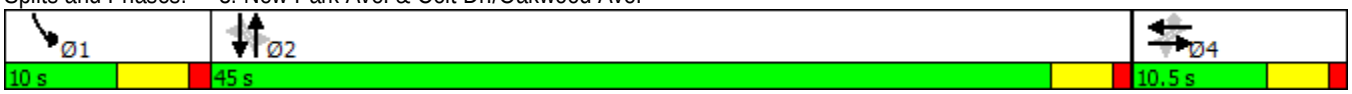

Movement	EBL	EBT	EBR	WBL	WBT	WBR	NBL	NBT	NBR	SBL	SBT	SBR
Lane Configurations												
Traffic Volume (vph)	3	0	2	48	0	121	1	713	48	139	847	3
Future Volume (vph)	3	0	2	48	0	121	1	713	48	139	847	3
Ideal Flow (vphpl)	1900	1900	1900	1900	1900	1900	1900	1900	1900	1900	1900	1900
Total Lost time (s)		4.0			4.0	4.0		4.0		4.5	4.0	
Lane Util. Factor		1.00			1.00	1.00		0.95		1.00	0.95	
Frt		0.93			1.00	0.85		0.99		1.00	1.00	
Flt Protected		0.98			0.95	1.00		1.00		0.95	1.00	
Satd. Flow (prot)		1729			1736	1583		3564		1770	3607	
Flt Permitted		0.80			0.87	1.00		0.95		0.28	1.00	
Satd. Flow (perm)		1425			1589	1583		3398		528	3607	
Peak-hour factor, PHF	0.75	0.38	0.47	0.66	0.50	0.65	0.50	0.86	0.80	0.90	0.78	0.50
Adj. Flow (vph)	4	0	4	73	0	186	2	829	60	154	1086	6
RTOR Reduction (vph)	0	7	0	0	0	169	0	9	0	0	1	0
Lane Group Flow (vph)	0	1	0	0	73	17	0	882	0	154	1091	0
Heavy Vehicles (%)	0%	0%	0%	4%	0%	2%	0%	0%	4%	2%	0%	0%
Turn Type	Perm	NA		Perm	NA	Perm	Perm	NA		pm+pt	NA	
Protected Phases		4			4			2		1	2	
Permitted Phases	4			4		4	2			2		
Actuated Green, G (s)		4.6			4.6	4.6		29.6		33.3	29.6	
Effective Green, g (s)		4.6			4.6	4.6		29.6		33.3	29.6	
Actuated g/C Ratio		0.09			0.09	0.09		0.59		0.66	0.59	
Clearance Time (s)		4.0			4.0	4.0		4.0		4.5	4.0	
Vehicle Extension (s)		4.0			4.0	4.0		4.0		3.0	4.0	
Lane Grp Cap (vph)		130			145	144		1995		440	2118	
v/s Ratio Prot										c0.03	c0.30	
v/s Ratio Perm		0.00			c0.05	0.01		0.26		0.21		
v/c Ratio		0.01			0.50	0.12		0.44		0.35	0.52	
Uniform Delay, d1		20.8			21.8	21.0		5.8		3.3	6.2	
Progression Factor		1.00			1.00	1.00		1.00		1.00	1.00	
Incremental Delay, d2		0.0			3.7	0.5		0.2		0.5	0.3	
Delay (s)		20.8			25.5	21.5		6.0		3.8	6.4	
Level of Service		C			C	C		A		A	A	
Approach Delay (s)		20.8			22.7			6.0			6.1	
Approach LOS		C			C			A			A	

Intersection Summary			
HCM 2000 Control Delay	7.9	HCM 2000 Level of Service	A
HCM 2000 Volume to Capacity ratio	0.50		
Actuated Cycle Length (s)	50.4	Sum of lost time (s)	12.5
Intersection Capacity Utilization	61.4%	ICU Level of Service	B
Analysis Period (min)	15		
c Critical Lane Group			

Lane Group	EBL	EBT	EBR	WBL	WBT	WBR	NBL	NBT	NBR	SBL	SBT	SBR
Lane Configurations												
Traffic Volume (vph)	347	7	333	10	3	6	289	553	19	11	448	396
Future Volume (vph)	347	7	333	10	3	6	289	553	19	11	448	396
Ideal Flow (vphpl)	1900	1900	1900	1900	1900	1900	1900	1900	1900	1900	1900	1900
Storage Length (ft)	0		0	0		0	315		0	200		0
Storage Lanes	1		1	0		0	1		0	1		1
Taper Length (ft)	25			25			25			25		
Lane Util. Factor	0.95	0.95	1.00	1.00	1.00	1.00	1.00	0.95	0.95	1.00	0.95	1.00
Frt			0.850		0.955			0.995				0.850
Flt Protected	0.950	0.954			0.974		0.950			0.950		
Satd. Flow (prot)	1698	1706	1583	0	1767	0	1787	3558	0	1805	3610	1583
Flt Permitted	0.950	0.954			0.974		0.316			0.416		
Satd. Flow (perm)	1698	1706	1583	0	1767	0	594	3558	0	790	3610	1583
Right Turn on Red			Yes			Yes			Yes			Yes
Satd. Flow (RTOR)			362		7			2				430
Link Speed (mph)		30			30			30			30	
Link Distance (ft)		189			135			656			374	
Travel Time (s)		4.3			3.1			14.9			8.5	
Peak Hour Factor	0.92	0.92	0.92	0.92	0.92	0.92	0.92	0.92	0.92	0.92	0.92	0.92
Heavy Vehicles (%)	1%	0%	2%	0%	0%	0%	1%	1%	0%	0%	0%	2%
Adj. Flow (vph)	377	8	362	11	3	7	314	601	21	12	487	430
Shared Lane Traffic (%)	49%											
Lane Group Flow (vph)	192	193	362	0	21	0	314	622	0	12	487	430
Turn Type	Split	NA	pt+ov	Split	NA		pm+pt	NA		pm+pt	NA	pt+ov
Protected Phases	8	8	8 1	7	7		1	6		5	2	2 8
Permitted Phases							6			2		
Detector Phase	8	8	8 1	7	7		1	6		5	2	2 8
Switch Phase												
Minimum Initial (s)	6.0	6.0		4.0	4.0		5.0	5.0		6.0	5.0	
Minimum Split (s)	10.0	10.0		8.0	8.0		9.5	22.5		10.0	22.5	
Total Split (s)	29.0	29.0		14.0	14.0		14.0	14.0		29.0	29.0	
Total Split (%)	26.1%	26.1%		12.6%	12.6%		12.6%	12.6%		26.1%	26.1%	
Maximum Green (s)	25.0	25.0		10.0	10.0		9.5	9.5		25.0	24.5	
Yellow Time (s)	3.0	3.0		3.0	3.0		3.5	3.5		3.0	3.5	
All-Red Time (s)	1.0	1.0		1.0	1.0		1.0	1.0		1.0	1.0	
Lost Time Adjust (s)	0.0	0.0			0.0		0.0	0.0		0.0	0.0	
Total Lost Time (s)	4.0	4.0			4.0		4.5	4.5		4.0	4.5	
Lead/Lag	Lag	Lag		Lead	Lead		Lead	Lag		Lead	Lag	
Lead-Lag Optimize?	Yes	Yes		Yes	Yes		Yes	Yes		Yes	Yes	
Vehicle Extension (s)	3.0	3.0		3.0	3.0		3.0	3.0		3.0	3.0	
Recall Mode	None	None		None	None		None	Min		None	Min	
Walk Time (s)								7.0			7.0	
Flash Dont Walk (s)								11.0			11.0	
Pedestrian Calls (#/hr)								0			0	
Act Effct Green (s)	13.7	13.7	28.6		6.4		27.3	26.0		19.5	12.5	29.8
Actuated g/C Ratio	0.26	0.26	0.55		0.12		0.53	0.50		0.38	0.24	0.58
v/c Ratio	0.43	0.43	0.35		0.09		0.57	0.35		0.03	0.56	0.39
Control Delay	20.2	20.2	2.3		23.1		16.0	11.7		9.6	21.1	1.6
Queue Delay	0.0	0.0	0.0		0.0		0.0	0.0		0.0	0.0	0.0

Lane Group	Ø3
Lane Configurations	
Traffic Volume (vph)	
Future Volume (vph)	
Ideal Flow (vphpl)	
Storage Length (ft)	
Storage Lanes	
Taper Length (ft)	
Lane Util. Factor	
Frt	
Flt Protected	
Satd. Flow (prot)	
Flt Permitted	
Satd. Flow (perm)	
Right Turn on Red	
Satd. Flow (RTOR)	
Link Speed (mph)	
Link Distance (ft)	
Travel Time (s)	
Peak Hour Factor	
Heavy Vehicles (%)	
Adj. Flow (vph)	
Shared Lane Traffic (%)	
Lane Group Flow (vph)	
Turn Type	
Protected Phases	3
Permitted Phases	
Detector Phase	
Switch Phase	
Minimum Initial (s)	5.0
Minimum Split (s)	29.5
Total Split (s)	25.0
Total Split (%)	23%
Maximum Green (s)	20.5
Yellow Time (s)	3.5
All-Red Time (s)	1.0
Lost Time Adjust (s)	
Total Lost Time (s)	
Lead/Lag	
Lead-Lag Optimize?	
Vehicle Extension (s)	3.0
Recall Mode	None
Walk Time (s)	4.0
Flash Dont Walk (s)	21.0
Pedestrian Calls (#/hr)	0
Act Effct Green (s)	
Actuated g/C Ratio	
v/c Ratio	
Control Delay	
Queue Delay	

Lane Group	EBL	EBT	EBR	WBL	WBT	WBR	NBL	NBT	NBR	SBL	SBT	SBR
Total Delay	20.2	20.2	2.3		23.1		16.0	11.7		9.6	21.1	1.6
LOS	C	C	A		C		B	B		A	C	A
Approach Delay		11.5			23.1			13.1			12.0	
Approach LOS		B			C			B			B	
Queue Length 50th (ft)	45	45	0		4		41	42		1	61	0
Queue Length 95th (ft)	133	134	41		27		#173	184		12	152	16
Internal Link Dist (ft)		109			55			576			294	
Turn Bay Length (ft)							315			200		
Base Capacity (vph)	876	880	1063		370		547	1789		969	1825	1399
Starvation Cap Reductn	0	0	0		0		0	0		0	0	0
Spillback Cap Reductn	0	0	0		0		0	0		0	0	0
Storage Cap Reductn	0	0	0		0		0	0		0	0	0
Reduced v/c Ratio	0.22	0.22	0.34		0.06		0.57	0.35		0.01	0.27	0.31

Intersection Summary

Area Type: Other
Cycle Length: 111
Actuated Cycle Length: 51.7
Natural Cycle: 90
Control Type: Actuated-Uncoordinated
Maximum v/c Ratio: 0.57
Intersection Signal Delay: 12.4 Intersection LOS: B
Intersection Capacity Utilization 55.6% ICU Level of Service B
Analysis Period (min) 15
95th percentile volume exceeds capacity, queue may be longer.
Queue shown is maximum after two cycles.

Splits and Phases: 4: New Park Ave. & West Hartford Place/Private Dr.

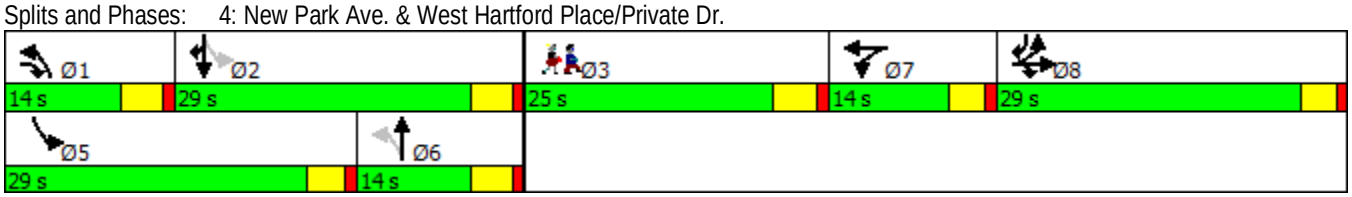

Lane Group	Ø3
Total Delay	
LOS	
Approach Delay	
Approach LOS	
Queue Length 50th (ft)	
Queue Length 95th (ft)	
Internal Link Dist (ft)	
Turn Bay Length (ft)	
Base Capacity (vph)	
Starvation Cap Reductn	
Spillback Cap Reductn	
Storage Cap Reductn	
Reduced v/c Ratio	

Intersection Summary

Movement	EBL	EBT	EBR	WBL	WBT	WBR	NBL	NBT	NBR	SBL	SBT	SBR
Lane Configurations												
Traffic Volume (vph)	347	7	333	10	3	6	289	553	19	11	448	396
Future Volume (vph)	347	7	333	10	3	6	289	553	19	11	448	396
Ideal Flow (vphpl)	1900	1900	1900	1900	1900	1900	1900	1900	1900	1900	1900	1900
Total Lost time (s)	4.0	4.0	4.0		4.0		4.5	4.5		4.0	4.5	4.5
Lane Util. Factor	0.95	0.95	1.00		1.00		1.00	0.95		1.00	0.95	1.00
Frt	1.00	1.00	0.85		0.95		1.00	0.99		1.00	1.00	0.85
Flt Protected	0.95	0.95	1.00		0.97		0.95	1.00		0.95	1.00	1.00
Satd. Flow (prot)	1698	1706	1583		1768		1787	3557		1805	3610	1583
Flt Permitted	0.95	0.95	1.00		0.97		0.32	1.00		0.42	1.00	1.00
Satd. Flow (perm)	1698	1706	1583		1768		595	3557		791	3610	1583
Peak-hour factor, PHF	0.92	0.92	0.92	0.92	0.92	0.92	0.92	0.92	0.92	0.92	0.92	0.92
Adj. Flow (vph)	377	8	362	11	3	7	314	601	21	12	487	430
RTOR Reduction (vph)	0	0	189	0	7	0	0	1	0	0	0	208
Lane Group Flow (vph)	192	193	173	0	14	0	314	621	0	12	487	222
Heavy Vehicles (%)	1%	0%	2%	0%	0%	0%	1%	1%	0%	0%	0%	2%
Turn Type	Split	NA	pt+ov	Split	NA		pm+pt	NA		pm+pt	NA	pt+ov
Protected Phases	8	8	8 1	7	7		1	6		5	2	2 8
Permitted Phases							6			2		
Actuated Green, G (s)	13.7	13.7	27.8		1.0		30.9	26.0		17.2	16.3	30.0
Effective Green, g (s)	13.7	13.7	27.8		1.0		30.9	26.0		17.2	16.3	30.0
Actuated g/C Ratio	0.24	0.24	0.48		0.02		0.53	0.45		0.30	0.28	0.52
Clearance Time (s)	4.0	4.0			4.0		4.5	4.5		4.0	4.5	
Vehicle Extension (s)	3.0	3.0			3.0		3.0	3.0		3.0	3.0	
Lane Grp Cap (vph)	400	402	757		30		523	1591		249	1012	817
v/s Ratio Prot	0.11	c0.11	0.11		c0.01		c0.10	0.17		0.00	0.13	0.14
v/s Ratio Perm							c0.21			0.01		
v/c Ratio	0.48	0.48	0.23		0.47		0.60	0.39		0.05	0.48	0.27
Uniform Delay, d1	19.1	19.1	8.9		28.3		8.4	10.7		14.5	17.4	7.9
Progression Factor	1.00	1.00	1.00		1.00		1.00	1.00		1.00	1.00	1.00
Incremental Delay, d2	0.9	0.9	0.2		11.2		1.9	0.2		0.1	0.4	0.2
Delay (s)	20.0	20.0	9.0		39.5		10.3	10.9		14.6	17.7	8.1
Level of Service	C	C	A		D		B	B		B	B	A
Approach Delay (s)		14.7			39.5			10.7			13.2	
Approach LOS		B			D			B			B	

Intersection Summary			
HCM 2000 Control Delay	13.0	HCM 2000 Level of Service	B
HCM 2000 Volume to Capacity ratio	0.68		
Actuated Cycle Length (s)	58.1	Sum of lost time (s)	21.5
Intersection Capacity Utilization	55.6%	ICU Level of Service	B
Analysis Period (min)	15		
c Critical Lane Group			

Lane Group	EBL	EBT	EBR	WBL	WBT	WBR	NBL	NBT	NBR	SBL	SBT	SBR
Lane Configurations												
Traffic Volume (vph)	22	129	189	308	177	352	180	452	265	322	508	15
Future Volume (vph)	22	129	189	308	177	352	180	452	265	322	508	15
Ideal Flow (vphpl)	1900	1900	1900	1900	1900	1900	1900	1900	1900	1900	1900	1900
Storage Length (ft)	50		0	0		0	150		0	410		0
Storage Lanes	1		1	1		1	1		0	1		0
Taper Length (ft)	25			25			25			25		
Lane Util. Factor	1.00	1.00	1.00	1.00	1.00	1.00	1.00	0.95	0.95	1.00	0.95	0.95
Frt			0.850			0.850		0.943			0.993	
Flt Protected	0.950			0.950			0.950			0.950		
Satd. Flow (prot)	1805	1881	1599	1752	1881	1615	1787	3358	0	1805	3517	0
Flt Permitted	0.626			0.443			0.356			0.950		
Satd. Flow (perm)	1189	1881	1599	817	1881	1615	670	3358	0	1805	3517	0
Right Turn on Red			Yes			Yes			Yes			Yes
Satd. Flow (RTOR)			220			396		102			4	
Link Speed (mph)		30			30			30			30	
Link Distance (ft)		282			376			408			1063	
Travel Time (s)		6.4			8.5			9.3			24.2	
Peak Hour Factor	0.69	0.85	0.86	0.91	0.84	0.89	0.79	0.84	0.81	0.89	0.94	0.59
Heavy Vehicles (%)	0%	1%	1%	3%	1%	0%	1%	1%	2%	0%	2%	0%
Adj. Flow (vph)	32	152	220	338	211	396	228	538	327	362	540	25
Shared Lane Traffic (%)												
Lane Group Flow (vph)	32	152	220	338	211	396	228	865	0	362	565	0
Turn Type	pm+pt	NA	Perm	pm+pt	NA	custom	pm+pt	NA		Prot	NA	
Protected Phases	7	4		3	8	8	1	6		5	2	
Permitted Phases	4		4	8		5	6					
Detector Phase	7	4	4	3	8	8	1	6		5	2	
Switch Phase												
Minimum Initial (s)	5.0	9.0	9.0	5.0	9.0	9.0	6.0	15.0		6.0	15.0	
Minimum Split (s)	9.5	14.0	14.0	9.5	14.0	14.0	10.5	20.1		10.5	20.1	
Total Split (s)	19.0	22.0	22.0	19.0	22.0	22.0	14.0	35.0		14.0	35.0	
Total Split (%)	15.8%	18.3%	18.3%	15.8%	18.3%	18.3%	11.7%	29.2%		11.7%	29.2%	
Maximum Green (s)	14.5	17.0	17.0	15.0	17.0	17.0	10.0	29.9		10.0	29.9	
Yellow Time (s)	3.5	3.0	3.0	3.0	3.0	3.0	3.0	3.6		3.0	3.6	
All-Red Time (s)	1.0	2.0	2.0	1.0	2.0	2.0	1.0	1.5		1.0	1.5	
Lost Time Adjust (s)	0.0	0.0	0.0	0.0	0.0	0.0	0.0	0.0		0.0	0.0	
Total Lost Time (s)	4.5	5.0	5.0	4.0	5.0	5.0	4.0	5.1		4.0	5.1	
Lead/Lag	Lead	Lag	Lag	Lead	Lag	Lag	Lead	Lag		Lead	Lag	
Lead-Lag Optimize?	Yes	Yes	Yes	Yes	Yes	Yes	Yes				Yes	
Vehicle Extension (s)	3.0	2.0	2.0	2.0	2.0	2.0	2.0	2.0		2.0	2.0	
Recall Mode	None	None	None	None	None	None	None	Max		None	Max	
Act Effct Green (s)	18.5	11.5	11.5	31.5	23.7	37.7	40.8	29.9		10.0	30.2	
Actuated g/C Ratio	0.22	0.14	0.14	0.37	0.28	0.45	0.48	0.35		0.12	0.36	
v/c Ratio	0.10	0.60	0.54	0.72	0.40	0.42	0.51	0.69		1.70	0.45	
Control Delay	18.6	44.3	10.2	30.5	29.1	3.4	15.5	24.2		360.9	22.5	
Queue Delay	0.0	0.0	0.0	0.0	0.0	0.0	0.0	0.0		0.0	0.0	
Total Delay	18.6	44.3	10.2	30.5	29.1	3.4	15.5	24.2		360.9	22.5	
LOS	B	D	B	C	C	A	B	C		F	C	
Approach Delay		23.7			18.8			22.4			154.7	

Lane Group	Ø9
Lane Configurations	
Traffic Volume (vph)	
Future Volume (vph)	
Ideal Flow (vphpl)	
Storage Length (ft)	
Storage Lanes	
Taper Length (ft)	
Lane Util. Factor	
Frt	
Flt Protected	
Satd. Flow (prot)	
Flt Permitted	
Satd. Flow (perm)	
Right Turn on Red	
Satd. Flow (RTOR)	
Link Speed (mph)	
Link Distance (ft)	
Travel Time (s)	
Peak Hour Factor	
Heavy Vehicles (%)	
Adj. Flow (vph)	
Shared Lane Traffic (%)	
Lane Group Flow (vph)	
Turn Type	
Protected Phases	9
Permitted Phases	
Detector Phase	
Switch Phase	
Minimum Initial (s)	5.0
Minimum Split (s)	9.5
Total Split (s)	30.0
Total Split (%)	25%
Maximum Green (s)	25.5
Yellow Time (s)	3.5
All-Red Time (s)	1.0
Lost Time Adjust (s)	
Total Lost Time (s)	
Lead/Lag	
Lead-Lag Optimize?	
Vehicle Extension (s)	3.0
Recall Mode	None
Act Effct Green (s)	
Actuated g/C Ratio	
v/c Ratio	
Control Delay	
Queue Delay	
Total Delay	
LOS	
Approach Delay	

Lane Group	EBL	EBT	EBR	WBL	WBT	WBR	NBL	NBT	NBR	SBL	SBT	SBR
Approach LOS		C			B			C			F	
Queue Length 50th (ft)	11	77	0	137	98	0	60	178		~284	117	
Queue Length 95th (ft)	22	127	51	215	152	50	96	237		#467	176	
Internal Link Dist (ft)		202			296			328			983	
Turn Bay Length (ft)	50						150			410		
Base Capacity (vph)	478	378	497	470	527	939	457	1254		213	1258	
Starvation Cap Reductn	0	0	0	0	0	0	0	0		0	0	
Spillback Cap Reductn	0	0	0	0	0	0	0	0		0	0	
Storage Cap Reductn	0	0	0	0	0	0	0	0		0	0	
Reduced v/c Ratio	0.07	0.40	0.44	0.72	0.40	0.42	0.50	0.69		1.70	0.45	

Intersection Summary

Area Type: Other
Cycle Length: 120
Actuated Cycle Length: 84.6
Natural Cycle: 90
Control Type: Actuated-Uncoordinated
Maximum v/c Ratio: 1.70
Intersection Signal Delay: 57.9 Intersection LOS: E
Intersection Capacity Utilization 78.5% ICU Level of Service D
Analysis Period (min) 15

~ Volume exceeds capacity, queue is theoretically infinite.
Queue shown is maximum after two cycles.

95th percentile volume exceeds capacity, queue may be longer.
Queue shown is maximum after two cycles.

Splits and Phases: 5: New Park Ave. & Flatbush Ave./Flatbush Ave.

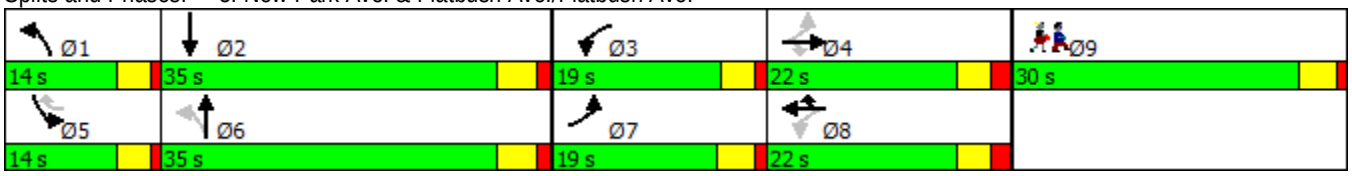

Lane Group	Ø9
Approach LOS	
Queue Length 50th (ft)	
Queue Length 95th (ft)	
Internal Link Dist (ft)	
Turn Bay Length (ft)	
Base Capacity (vph)	
Starvation Cap Reductn	
Spillback Cap Reductn	
Storage Cap Reductn	
Reduced v/c Ratio	

Intersection Summary

Movement	EBL	EBT	EBR	WBL	WBT	WBR	NBL	NBT	NBR	SBL	SBT	SBR
Lane Configurations												
Traffic Volume (vph)	22	129	189	308	177	352	180	452	265	322	508	15
Future Volume (vph)	22	129	189	308	177	352	180	452	265	322	508	15
Ideal Flow (vphpl)	1900	1900	1900	1900	1900	1900	1900	1900	1900	1900	1900	1900
Total Lost time (s)	4.5	5.0	5.0	4.0	5.0	5.0	4.0	5.1		4.0	5.1	
Lane Util. Factor	1.00	1.00	1.00	1.00	1.00	1.00	1.00	0.95		1.00	0.95	
Frt	1.00	1.00	0.85	1.00	1.00	0.85	1.00	0.94		1.00	0.99	
Flt Protected	0.95	1.00	1.00	0.95	1.00	1.00	0.95	1.00		0.95	1.00	
Satd. Flow (prot)	1805	1881	1599	1752	1881	1615	1787	3359		1805	3519	
Flt Permitted	0.63	1.00	1.00	0.44	1.00	1.00	0.36	1.00		0.95	1.00	
Satd. Flow (perm)	1189	1881	1599	817	1881	1615	669	3359		1805	3519	
Peak-hour factor, PHF	0.69	0.85	0.86	0.91	0.84	0.89	0.79	0.84	0.81	0.89	0.94	0.59
Adj. Flow (vph)	32	152	220	338	211	396	228	538	327	362	540	25
RTOR Reduction (vph)	0	0	186	0	0	242	0	67	0	0	3	0
Lane Group Flow (vph)	32	152	34	338	211	154	228	798	0	362	562	0
Heavy Vehicles (%)	0%	1%	1%	3%	1%	0%	1%	1%	2%	0%	2%	0%
Turn Type	pm+pt	NA	Perm	pm+pt	NA	custom	pm+pt	NA		Prot	NA	
Protected Phases	7	4		3	8	8	1	6		5	2	
Permitted Phases	4		4	8		5	6					
Actuated Green, G (s)	17.6	13.4	13.4	32.4	23.7	33.7	39.6	29.9		10.0	30.2	
Effective Green, g (s)	17.6	13.4	13.4	32.4	23.7	33.7	39.6	29.9		10.0	30.2	
Actuated g/C Ratio	0.20	0.16	0.16	0.37	0.27	0.39	0.46	0.35		0.12	0.35	
Clearance Time (s)	4.5	5.0	5.0	4.0	5.0	5.0	4.0	5.1		4.0	5.1	
Vehicle Extension (s)	3.0	2.0	2.0	2.0	2.0	2.0	2.0	2.0		2.0	2.0	
Lane Grp Cap (vph)	272	291	247	468	515	723	432	1162		208	1230	
v/s Ratio Prot	0.01	0.08		c0.13	0.11	0.06	0.06	c0.24		c0.20	0.16	
v/s Ratio Perm	0.02		0.02	c0.15		0.04	0.18					
v/c Ratio	0.12	0.52	0.14	0.72	0.41	0.21	0.53	0.69		1.74	0.46	
Uniform Delay, d1	27.9	33.6	31.5	21.2	25.6	17.5	14.8	24.2		38.2	21.8	
Progression Factor	1.00	1.00	1.00	1.00	1.00	1.00	1.00	1.00		1.00	1.00	
Incremental Delay, d2	0.2	0.8	0.1	4.6	0.2	0.1	0.5	3.3		352.4	1.2	
Delay (s)	28.1	34.3	31.6	25.8	25.8	17.6	15.3	27.6		390.6	23.0	
Level of Service	C	C	C	C	C	B	B	C		F	C	
Approach Delay (s)		32.4			22.4			25.0			166.5	
Approach LOS		C			C			C			F	

Intersection Summary			
HCM 2000 Control Delay	64.1	HCM 2000 Level of Service	E
HCM 2000 Volume to Capacity ratio	0.96		
Actuated Cycle Length (s)	86.4	Sum of lost time (s)	23.1
Intersection Capacity Utilization	78.5%	ICU Level of Service	D
Analysis Period (min)	15		
c Critical Lane Group			

Lane Group	EBL	EBT	EBR	WBL	WBT	WBR	NBL	NBT	NBR	SBL	SBT	SBR
Lane Configurations												
Traffic Volume (vph)	12	0	482	1	0	1	410	381	0	2	364	8
Future Volume (vph)	12	0	482	1	0	1	410	381	0	2	364	8
Ideal Flow (vphpl)	1900	1900	1900	1900	1900	1900	1900	1900	1900	1900	1900	1900
Storage Length (ft)	0		0	0		0	0		0	0		80
Storage Lanes	1		2	0		0	0		0	0		1
Taper Length (ft)	25			25			25			25		
Lane Util. Factor	1.00	1.00	0.88	1.00	1.00	1.00	0.95	0.95	0.95	0.95	0.95	1.00
Frt			0.850		0.955							0.850
Flt Protected	0.950				0.968			0.976			0.999	
Satd. Flow (prot)	1805	0	2787	0	1756	0	0	3488	0	0	3571	1615
Flt Permitted	0.950				0.968			0.455			0.933	
Satd. Flow (perm)	1805	0	2787	0	1756	0	0	1626	0	0	3335	1615
Right Turn on Red			Yes			Yes			Yes			Yes
Satd. Flow (RTOR)			542		149							147
Link Speed (mph)		30			30			30			30	
Link Distance (ft)		506			113			1063			446	
Travel Time (s)		11.5			2.6			24.2			10.1	
Peak Hour Factor	0.67	0.92	0.89	0.50	0.50	0.92	0.95	0.86	0.75	0.25	0.90	0.75
Heavy Vehicles (%)	0%	0%	2%	0%	0%	0%	1%	1%	0%	0%	1%	0%
Adj. Flow (vph)	18	0	542	2	0	1	432	443	0	8	404	11
Shared Lane Traffic (%)												
Lane Group Flow (vph)	18	0	542	0	3	0	0	875	0	0	412	11
Turn Type	Prot		custom	Split	NA		custom	NA		Perm	NA	Perm
Protected Phases	8		1 8	4	4		6!	1 6			2!	
Permitted Phases							1			2		2
Detector Phase	8		1 8	4	4		6	1 6		2	2	2
Switch Phase												
Minimum Initial (s)	10.0			5.0	5.0		15.0			15.0	15.0	15.0
Minimum Split (s)	15.0			24.1	24.1		21.3			21.3	21.3	21.3
Total Split (s)	30.0			21.0	21.0		68.0			36.0	36.0	36.0
Total Split (%)	21.2%			14.9%	14.9%		48.1%			25.5%	25.5%	25.5%
Maximum Green (s)	25.0			14.9	14.9		61.7			29.7	29.7	29.7
Yellow Time (s)	3.0			3.0	3.0		3.0			3.0	3.0	3.0
All-Red Time (s)	2.0			3.1	3.1		3.3			3.3	3.3	3.3
Lost Time Adjust (s)	0.0				0.0						0.0	0.0
Total Lost Time (s)	5.0				6.1						6.3	6.3
Lead/Lag										Lag	Lag	Lag
Lead-Lag Optimize?										Yes	Yes	Yes
Vehicle Extension (s)	2.0			2.0	2.0		3.0			3.0	3.0	3.0
Recall Mode	None			None	None		Max			None	None	None
Walk Time (s)												
Flash Dont Walk (s)												
Pedestrian Calls (#/hr)												
Act Effct Green (s)	10.0		39.8		5.0			61.1			30.1	30.1
Actuated g/C Ratio	0.12		0.47		0.06			0.72			0.35	0.35
v/c Ratio	0.08		0.34		0.01			0.35			0.35	0.02
Control Delay	36.3		2.1		0.0			5.4			22.1	0.0
Queue Delay	0.0		0.0		0.0			0.0			0.0	0.0

Lane Group	Ø1	Ø9
Lane Configurations		
Traffic Volume (vph)		
Future Volume (vph)		
Ideal Flow (vphpl)		
Storage Length (ft)		
Storage Lanes		
Taper Length (ft)		
Lane Util. Factor		
Frt		
Flt Protected		
Satd. Flow (prot)		
Flt Permitted		
Satd. Flow (perm)		
Right Turn on Red		
Satd. Flow (RTOR)		
Link Speed (mph)		
Link Distance (ft)		
Travel Time (s)		
Peak Hour Factor		
Heavy Vehicles (%)		
Adj. Flow (vph)		
Shared Lane Traffic (%)		
Lane Group Flow (vph)		
Turn Type		
Protected Phases	1	9
Permitted Phases		
Detector Phase		
Switch Phase		
Minimum Initial (s)	5.0	5.0
Minimum Split (s)	12.0	22.0
Total Split (s)	32.0	22.4
Total Split (%)	23%	16%
Maximum Green (s)	25.0	18.4
Yellow Time (s)	3.0	4.0
All-Red Time (s)	4.0	0.0
Lost Time Adjust (s)		
Total Lost Time (s)		
Lead/Lag	Lead	
Lead-Lag Optimize?	Yes	
Vehicle Extension (s)	2.0	3.0
Recall Mode	None	None
Walk Time (s)		5.0
Flash Dont Walk (s)		12.0
Pedestrian Calls (#/hr)		0
Act Effct Green (s)		
Actuated g/C Ratio		
v/c Ratio		
Control Delay		
Queue Delay		

Lane Group	EBL	EBT	EBR	WBL	WBT	WBR	NBL	NBT	NBR	SBL	SBT	SBR
Total Delay	36.3		2.1		0.0			5.4			22.1	0.0
LOS	D		A		A			A			C	A
Approach Delay		3.2						5.4			21.5	
Approach LOS		A						A			C	
Queue Length 50th (ft)	9		0		0			68			81	0
Queue Length 95th (ft)	23		30		0			141			142	0
Internal Link Dist (ft)		426			33			983			366	
Turn Bay Length (ft)												80
Base Capacity (vph)	530		1598		430			2503			1178	665
Starvation Cap Reductn	0		0		0			0			0	0
Spillback Cap Reductn	0		0		0			0			0	0
Storage Cap Reductn	0		0		0			0			0	0
Reduced v/c Ratio	0.03		0.34		0.01			0.35			0.35	0.02

Intersection Summary	
Area Type:	Other
Cycle Length: 141.4	
Actuated Cycle Length: 85.2	
Natural Cycle: 95	
Control Type: Actuated-Uncoordinated	
Maximum v/c Ratio: 0.35	
Intersection Signal Delay: 8.4	Intersection LOS: A
Intersection Capacity Utilization 55.5%	ICU Level of Service B
Analysis Period (min) 15	

! Phase conflict between lane groups.

Splits and Phases: 6: New Park Ave. & Prospect Ave./Private Dr.

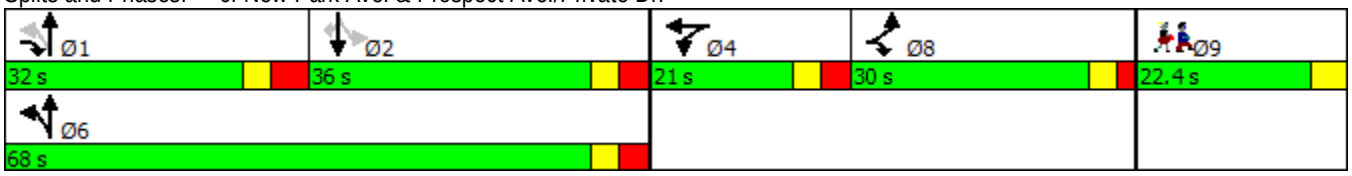

Lane Group	Ø1	Ø9
Total Delay		
LOS		
Approach Delay		
Approach LOS		
Queue Length 50th (ft)		
Queue Length 95th (ft)		
Internal Link Dist (ft)		
Turn Bay Length (ft)		
Base Capacity (vph)		
Starvation Cap Reductn		
Spillback Cap Reductn		
Storage Cap Reductn		
Reduced v/c Ratio		

Intersection Summary

Movement	EBL	EBT	EBR	WBL	WBT	WBR	NBL	NBT	NBR	SBL	SBT	SBR
Lane Configurations												
Traffic Volume (vph)	12	0	482	1	0	1	410	381	0	2	364	8
Future Volume (vph)	12	0	482	1	0	1	410	381	0	2	364	8
Ideal Flow (vphpl)	1900	1900	1900	1900	1900	1900	1900	1900	1900	1900	1900	1900
Total Lost time (s)	5.0		7.0		6.1			7.0			6.3	6.3
Lane Util. Factor	1.00		0.88		1.00			0.95			0.95	1.00
Frt	1.00		0.85		0.95			1.00			1.00	0.85
Flt Protected	0.95		1.00		0.97			0.98			1.00	1.00
Satd. Flow (prot)	1805		2787		1756			3488			3571	1615
Flt Permitted	0.95		1.00		0.97			0.46			0.93	1.00
Satd. Flow (perm)	1805		2787		1756			1626			3337	1615
Peak-hour factor, PHF	0.67	0.92	0.89	0.50	0.50	0.92	0.95	0.86	0.75	0.25	0.90	0.75
Adj. Flow (vph)	18	0	542	2	0	1	432	443	0	8	404	11
RTOR Reduction (vph)	0	0	333	0	3	0	0	0	0	0	0	7
Lane Group Flow (vph)	18	0	209	0	0	0	0	875	0	0	412	4
Heavy Vehicles (%)	0%	0%	2%	0%	0%	0%	1%	1%	0%	0%	1%	0%
Turn Type	Prot		custom	Split	NA		custom	NA		Perm	NA	Perm
Protected Phases	8		1 8	4	4		6!	1 6			2!	
Permitted Phases							1			2		2
Actuated Green, G (s)	10.0		39.7		0.9			61.9			30.2	30.2
Effective Green, g (s)	10.0		34.7		0.9			61.9			30.2	30.2
Actuated g/C Ratio	0.11		0.38		0.01			0.69			0.33	0.33
Clearance Time (s)	5.0				6.1						6.3	6.3
Vehicle Extension (s)	2.0				2.0						3.0	3.0
Lane Grp Cap (vph)	200		1072		17			2393			1117	540
v/s Ratio Prot	0.01		c0.07		c0.00			c0.25				
v/s Ratio Perm											0.12	0.00
v/c Ratio	0.09		0.19		0.00			0.37			0.37	0.01
Uniform Delay, d1	36.0		18.5		44.2			5.9			22.8	20.0
Progression Factor	1.00		1.00		1.00			1.00			1.00	1.00
Incremental Delay, d2	0.1		0.0		0.0			0.0			0.2	0.0
Delay (s)	36.1		18.5		44.2			6.0			23.0	20.0
Level of Service	D		B		D			A			C	C
Approach Delay (s)		19.1			44.2			6.0			22.9	
Approach LOS		B			D			A			C	

Intersection Summary			
HCM 2000 Control Delay	13.8	HCM 2000 Level of Service	B
HCM 2000 Volume to Capacity ratio	0.40		
Actuated Cycle Length (s)	90.2	Sum of lost time (s)	28.4
Intersection Capacity Utilization	55.5%	ICU Level of Service	B
Analysis Period (min)	15		

! Phase conflict between lane groups.
c Critical Lane Group

2016 existing

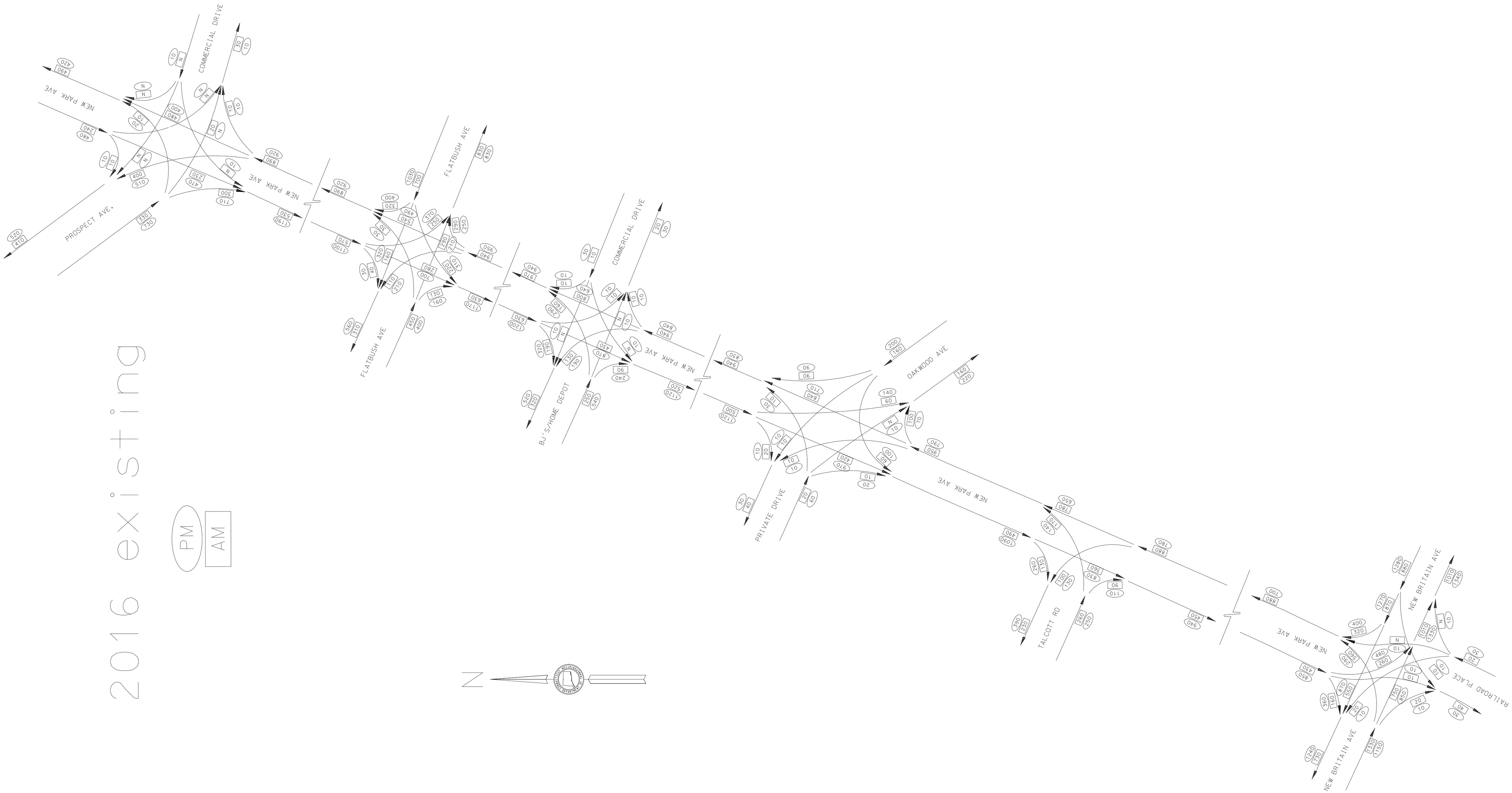

2016 existing - Sat.

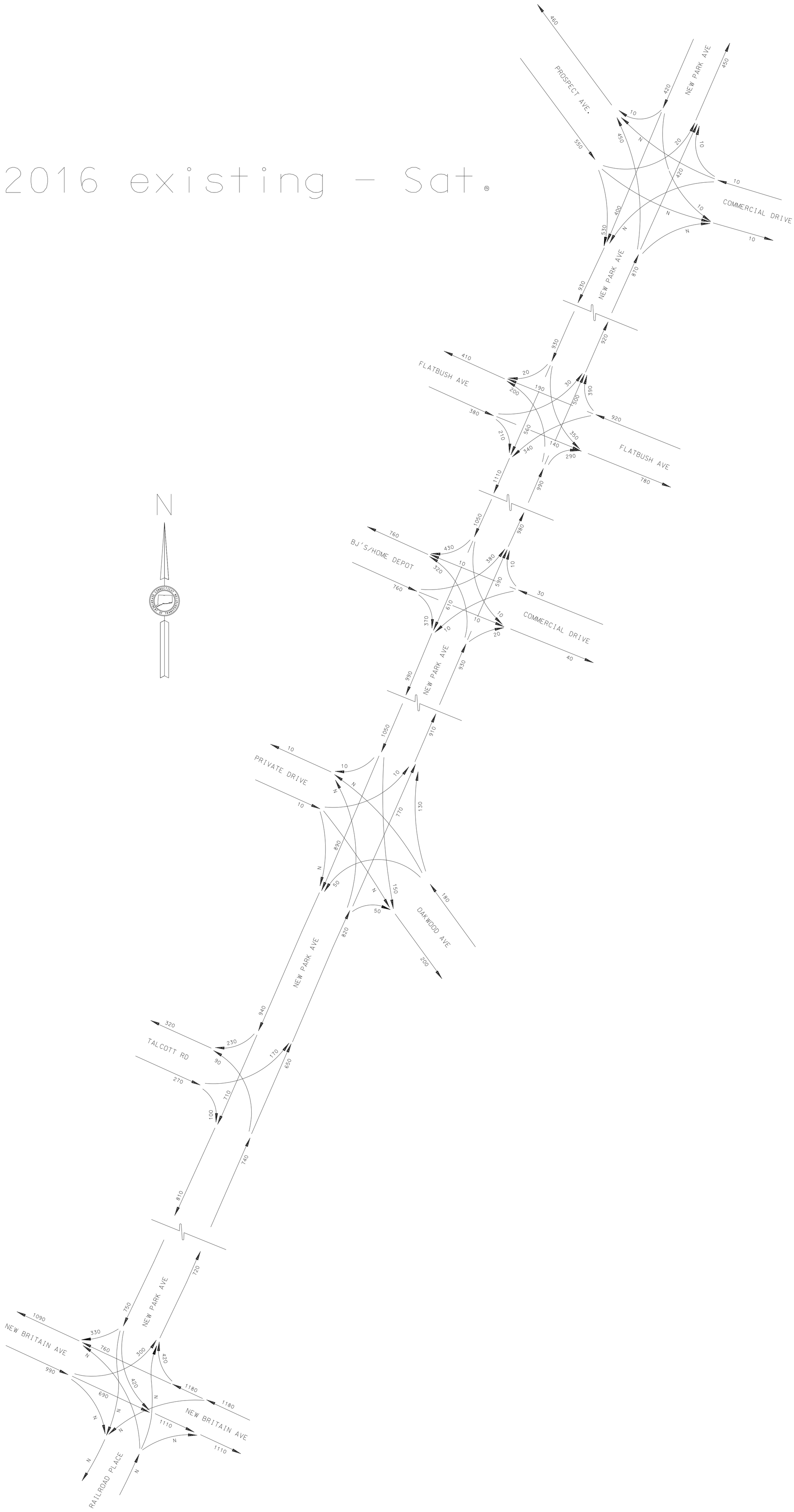

Connecticut Counts LLC

Kensington, Connecticut 06037
(860) 828-1693

New Park Ave at New Britain Ave/Railroad
West Hartford, Connecticut

File Name : 14125
Site Code : 14125
Start Date : 3/31/2016
Page No : 1

Groups Printed- Unshifted - Bank 1 - Bank 2

	New Park Avenue From North					New Britain Avenue From East					Railroad From South					New Britain Avenue From West					
Start Time	Right	Thru	Left	Peds	App. Total	Right	Thru	Left	Peds	App. Total	Right	Thru	Left	Peds	App. Total	Right	Thru	Left	Peds	App. Total	Int. Total
07:00 AM	14	0	29	1	44	45	92	0	2	139	0	0	1	0	1	0	98	67	0	165	349
07:15 AM	23	0	33	1	57	61	122	0	0	183	0	0	2	0	2	0	148	104	0	252	494
07:30 AM	45	0	37	0	82	74	132	0	2	208	0	0	0	0	0	16	175	117	0	308	598
07:45 AM	22	1	64	0	87	86	118	0	2	206	0	0	1	0	1	1	175	136	1	313	607
Total	104	1	163	2	270	266	464	0	6	736	0	0	4	0	4	17	596	424	1	1038	2048
08:00 AM	26	0	59	1	86	71	101	0	1	173	0	0	2	0	2	0	185	132	0	317	578
08:15 AM	43	0	74	1	118	62	142	0	2	206	1	0	1	0	2	0	151	127	0	278	604
08:30 AM	35	1	60	0	96	68	113	0	1	182	0	0	2	0	2	0	142	116	0	258	538
08:45 AM	32	1	55	0	88	65	93	0	0	158	0	1	0	0	1	0	166	99	0	265	512
Total	136	2	248	2	388	266	449	0	4	719	1	1	5	0	7	0	644	474	0	1118	2232
Grand Total	240	3	411	4	658	532	913	0	10	1455	1	1	9	0	11	17	1240	898	1	2156	4280
Apprch %	36.5	0.5	62.5	0.6		36.6	62.7	0	0.7		9.1	9.1	81.8	0		0.8	57.5	41.7	0		
Total %	5.6	0.1	9.6	0.1	15.4	12.4	21.3	0	0.2	34	0	0	0.2	0	0.3	0.4	29	21	0	50.4	
Unshifted	227	2	398	4	631	528	848	0	10	1386	1	0	2	0	3	14	1186				
% Unshifted	94.6	66.7	96.8	100	95.9	99.2	92.9	0	100	95.3	100	0	22.2	0	27.3	82.4	95.6	97	100	96.1	95.6
Bank 1	6	1	5	0	12	1	11	0	0	12	0	1	7	0	8	3	11	12	0	26	58
% Bank 1	2.5	33.3	1.2	0	1.8	0.2	1.2	0	0	0.8	0	100	77.8	0	72.7	17.6	0.9	1.3	0	1.2	1.4
Bank 2	7	0	8	0	15	3	54	0	0	57	0	0	0	0	0	0	43	15	0	58	130
% Bank 2	2.9	0	1.9	0	2.3	0.6	5.9	0	0	3.9	0	0	0	0	0	0	3.5	1.7	0	2.7	3

Connecticut Counts LLC

Kensington, Connecticut 06037
(860) 828-1693

File Name : 14125
Site Code : 14125
Start Date : 3/31/2016
Page No : 2

	New Park Avenue From North					New Britain Avenue From East					Railroad From South					New Britain Avenue From West					
Start Time	Right	Thru	Left	Peds	App. Total	Right	Thru	Left	Peds	App. Total	Right	Thru	Left	Peds	App. Total	Right	Thru	Left	Peds	App. Total	Int. Total
Peak Hour Analysis From 07:00 AM to 08:45 AM - Peak 1 of 1																					
Peak Hour for Entire Intersection Begins at 07:30 AM																					
07:30 AM	**45**	0	37	0	82	74	132	0	**2**	**208**	0	0	0	0	0	**16**	175	117	0	308	598
07:45 AM	22	**1**	64	0	87	**86**	118	0	2	206	0	0	1	0	1	1	175	**136**	**1**	313	**607**
08:00 AM	26	0	59	**1**	86	71	101	0	1	173	0	0	**2**	0	**2**	0	**185**	132	0	**317**	578
08:15 AM	43	0	**74**	1	**118**	62	**142**	0	2	206	**1**	0	1	0	2	0	151	127	0	278	604
Total Volume	136	1	234	2	373	293	493	0	7	793	1	0	4	0	5	17	686	512	1	1216	2387
% App. Total	36.5	0.3	62.7	0.5		36.9	62.2	0	0.9		20	0	80	0		1.4	56.4	42.1	0.1		
PHF	.756	.250	.791	.500	.790	.852	.868	.000	.875	.953	.250	.000	.500	.000	.625	.266	.927	.941	.250	.959	.983

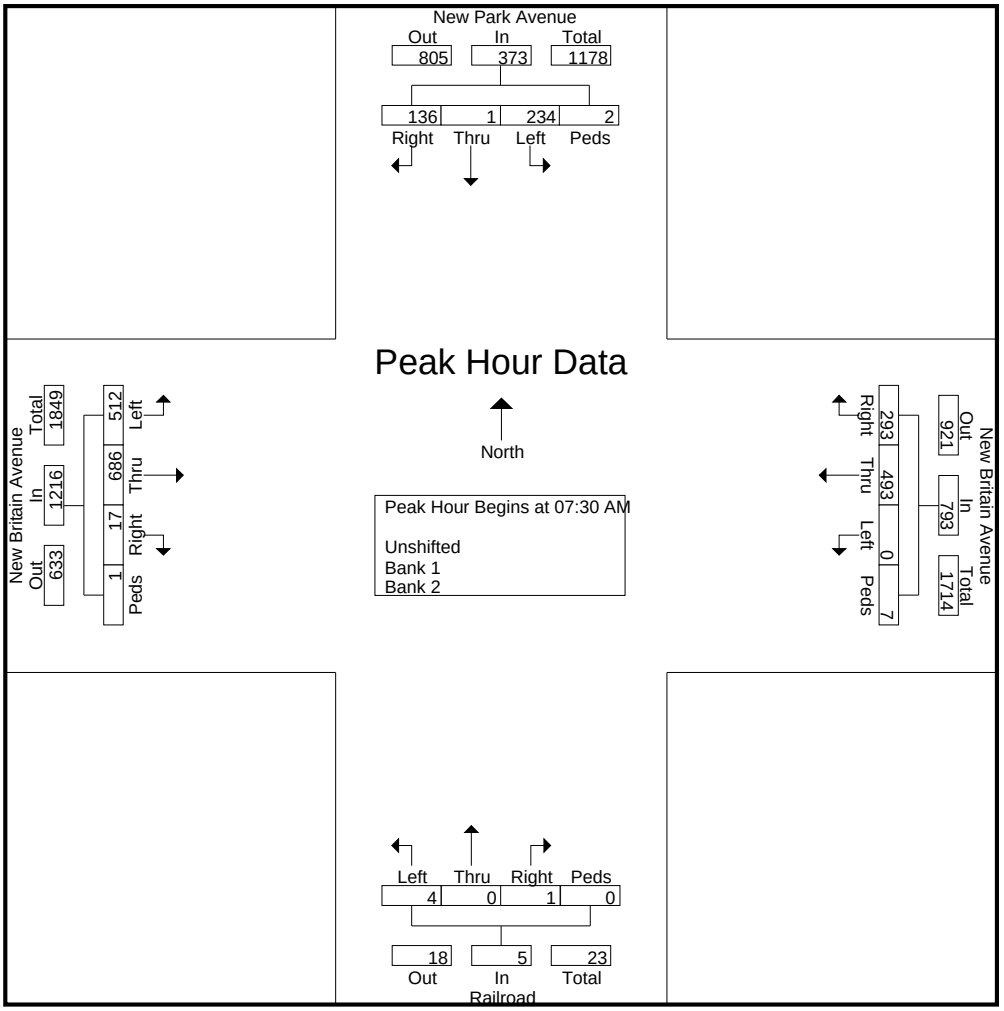

Connecticut Counts LLC

Kensington, Connecticut 06037
(860) 828-1693

File Name : 14125
Site Code : 14125
Start Date : 3/31/2016
Page No : 3

	New Park Avenue From North					New Britain Avenue From East					Railroad From South					New Britain Avenue From West					
Start Time	Right	Thru	Left	Peds	App. Total	Right	Thru	Left	Peds	App. Total	Right	Thru	Left	Peds	App. Total	Right	Thru	Left	Peds	App. Total	Int. Total
Peak Hour Analysis From 07:00 AM to 08:45 AM - Peak 1 of 1																					
Peak Hour for Each Approach Begins at:																					
	08:00 AM					07:30 AM					07:45 AM					07:30 AM					
+0 mins.	26	0	59	**1**	86	74	132	0	**2**	**208**	0	0	1	0	1	**16**	175	117	0	308	
+15 mins.	**43**	0	**74**	1	**118**	**86**	118	0	2	206	0	0	**2**	0	**2**	1	175	**136**	**1**	313	
+30 mins.	35	**1**	60	0	96	71	101	0	1	173	**1**	0	1	0	2	0	**185**	132	0	**317**	
+45 mins.	32	1	55	0	88	62	**142**	0	2	206	0	0	2	0	2	0	151	127	0	278	
Total Volume	136	2	248	2	388	293	493	0	7	793	1	0	6	0	7	17	686	512	1	1216	
% App. Total	35.1	0.5	63.9	0.5		36.9	62.2	0	0.9		14.3	0	85.7	0		1.4	56.4	42.1	0.1		
PHF	.791	.500	.838	.500	.822	.852	.868	.000	.875	.953	.250	.000	.750	.000	.875	.266	.927	.941	.250	.959	

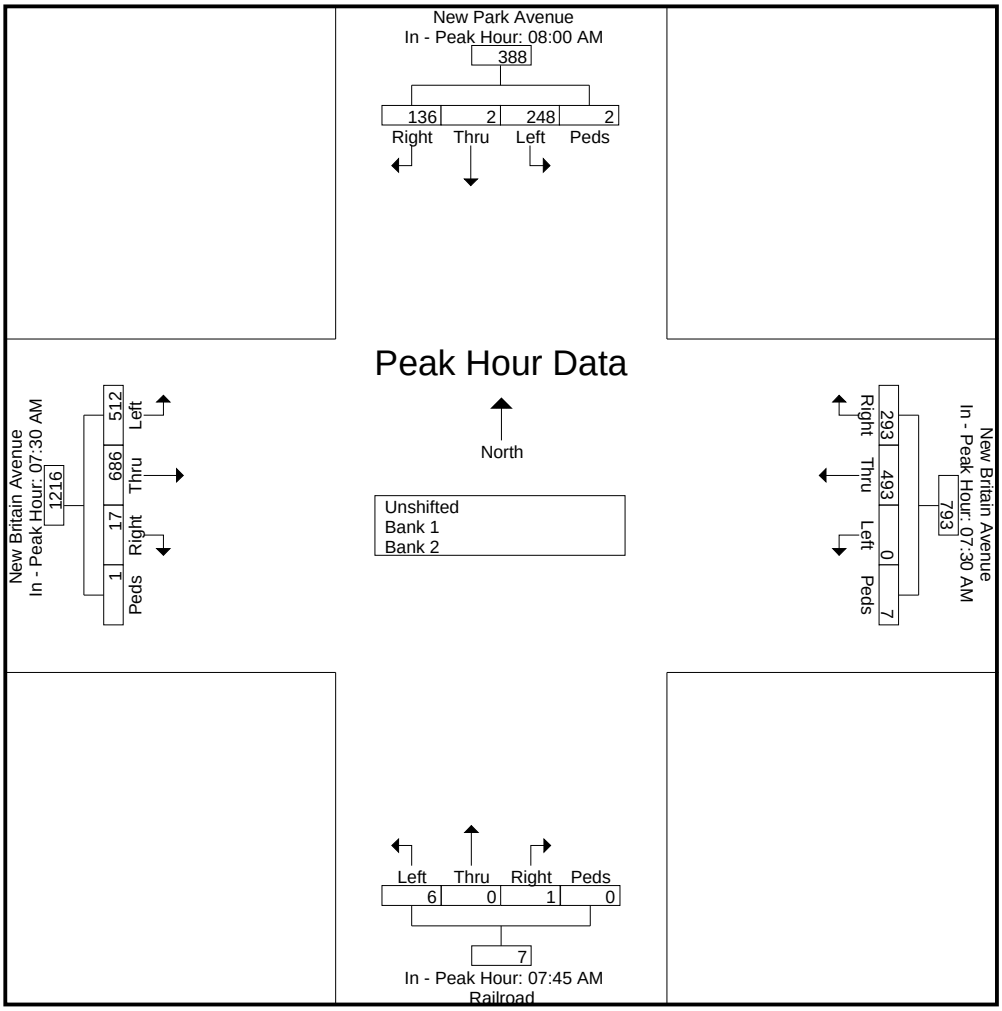

Connecticut Counts LLC

Kensington, Connecticut 06037
(860) 828-1693

New Britain Ave at New Park Ave/Railroad
West Hartford, Connecticut

File Name : 14126
Site Code : 14126
Start Date : 3/31/2016
Page No : 1

Groups Printed- Lights - Buses - Trucks - Bicycles on Crosswalk - Pedestrians

	New Park Avenue From North					New Britain Avenue From East					Railroad Rd From South					New Britain Avenue From West					
Start Time	Right	Thru	Left	Peds	App. Total	Right	Thru	Left	Peds	App. Total	Right	Thru	Left	Peds	App. Total	Right	Thru	Left	Peds	App. Total	Int. Total
04:00 PM	63	0	77	0	140	83	202	0	0	285	2	1	0	1	4	0	153	47	0	200	629
04:15 PM	76	0	103	0	179	84	175	1	1	261	0	0	0	5	5	0	169	38	0	207	652
04:30 PM	70	0	97	0	167	93	183	1	1	278	1	0	0	1	2	1	203	72	0	276	723
04:45 PM	85	1	106	0	192	107	179	0	2	288	0	0	0	4	4	1	204	68	1	274	758
Total	294	1	383	0	678	367	739	2	4	1112	3	1	0	11	15	2	729	225	1	957	2762
05:00 PM	73	0	115	1	189	79	209	0	1	289	0	0	0	0	0	0	170	59	0	229	707
05:15 PM	86	1	89	0	176	89	216	0	1	306	0	0	0	0	0	1	196	66	0	263	745
05:30 PM	93	0	113	3	209	74	186	0	0	260	0	0	0	3	3	0	168	59	2	229	701
05:45 PM	66	0	87	0	153	101	197	0	1	299	0	0	0	1	1	0	162	53	0	215	668
Total	318	1	404	4	727	343	808	0	3	1154	0	0	0	4	4	1	696	237	2	936	2821
Grand Total	612	2	787	4	1405	710	1547	2	7	2266	3	1	0	15	19	3	1425	462	3	1893	5583
Apprch %	43.6	0.1	56	0.3		31.3	68.3	0.1	0.3		15.8	5.3	0	78.9		0.2	75.3	24.4	0.2		
Total %	11	0	14.1	0.1	25.2	12.7	27.7	0	0.1	40.6	0.1	0	0	0.3	0.3	0.1	25.5	8.3	0.1	33.9	
Lights	600	0	770	0	1370	699	1524										1376				
% Lights	98	0	97.8	0	97.5	98.5	98.5	50	0	98.1	66.7	100	0	0	15.8	33.3	96.6	98.1	0	96.7	97.2
Buses	7	0	2	0	9	2	11	0	0	13	0	0	0	0	0	0	32	6	0	38	60
% Buses	1.1	0	0.3	0	0.6	0.3	0.7	0	0	0.6	0	0	0	0	0	0	2.2	1.3	0	2	1.1
Trucks	5	2	15	0	22	9	12	1	0	22	1	0	0	0	1	2	17	3	0	22	67
% Trucks	0.8	100	1.9	0	1.6	1.3	0.8	50	0	1	33.3	0	0	0	5.3	66.7	1.2	0.6	0	1.2	1.2
Bicycles on Crosswalk																					
% Bicycles on Crosswalk	0	0	0	0	0	0	0	0	0	0	0	0	0	0	0	0	0	0	0	0	0
Pedestrians	0	0	0	4	4	0	0	0	7	7	0	0	0	15	15	0	0	0	3	3	29
% Pedestrians	0	0	0	100	0.3	0	0	0	100	0.3	0	0	0	100	78.9	0	0	0	100	0.2	0.5

Connecticut Counts LLC

Kensington, Connecticut 06037
(860) 828-1693

File Name : 14126
Site Code : 14126
Start Date : 3/31/2016
Page No : 2

	New Park Avenue From North					New Britain Avenue From East					Railroad Rd From South					New Britain Avenue From West					
Start Time	Right	Thru	Left	Peds	App. Total	Right	Thru	Left	Peds	App. Total	Right	Thru	Left	Peds	App. Total	Right	Thru	Left	Peds	App. Total	Int. Total
Peak Hour Analysis From 04:00 PM to 05:45 PM - Peak 1 of 1																					
Peak Hour for Entire Intersection Begins at 04:30 PM																					
04:30 PM	70	0	97	0	167	93	183	**1**	1	278	**1**	0	0	1	2	**1**	203	**72**	0	**276**	723
04:45 PM	85	**1**	106	0	**192**	**107**	179	0	**2**	288	0	0	0	**4**	**4**	1	**204**	68	**1**	274	**758**
05:00 PM	73	0	**115**	**1**	189	79	209	0	1	289	0	0	0	0	0	0	170	59	0	229	707
05:15 PM	**86**	1	89	0	176	89	**216**	0	1	**306**	0	0	0	0	0	1	196	66	0	263	745
Total Volume	314	2	407	1	724	368	787	1	5	1161	1	0	0	5	6	3	773	265	1	1042	2933
% App. Total	43.4	0.3	56.2	0.1		31.7	67.8	0.1	0.4		16.7	0	0	83.3		0.3	74.2	25.4	0.1		
PHF	.913	.500	.885	.250	.943	.860	.911	.250	.625	.949	.250	.000	.000	.313	.375	.750	.947	.920	.250	.944	.967

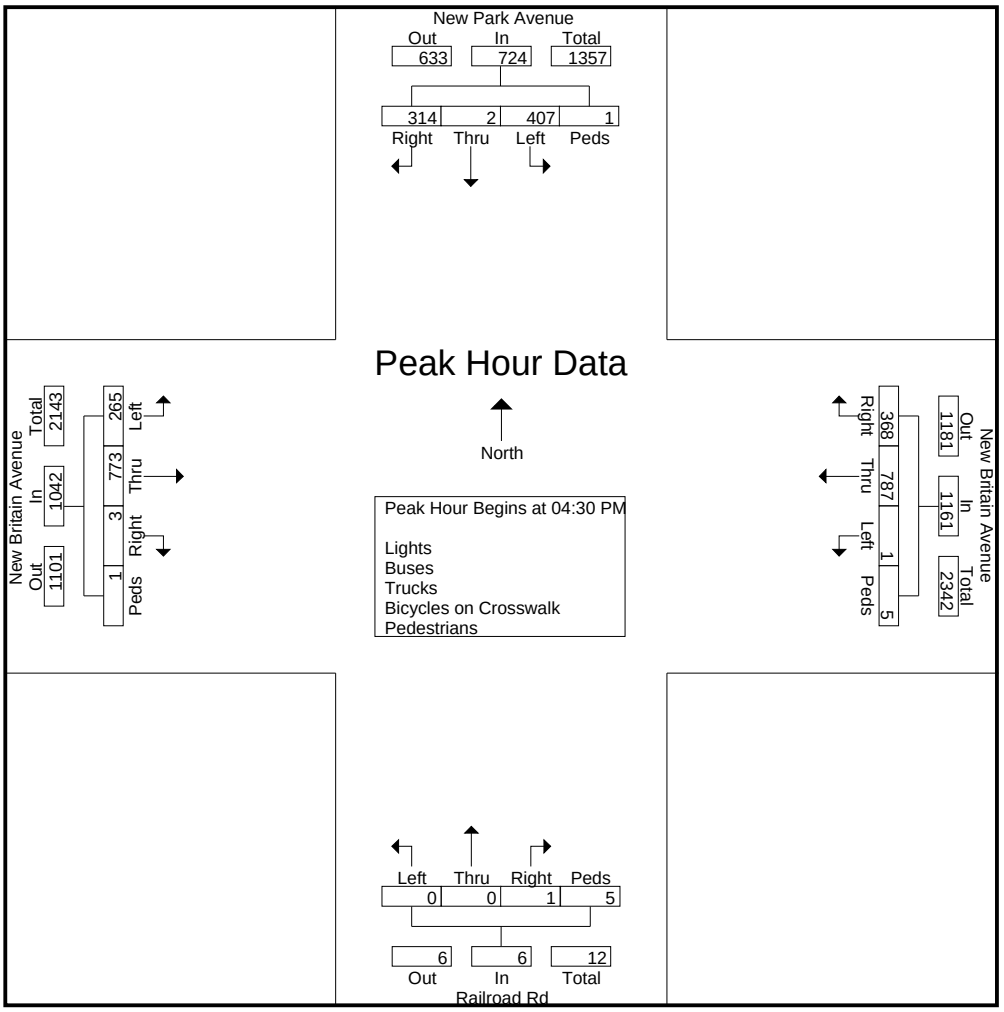

Connecticut Counts LLC

Kensington, Connecticut 06037
(860) 828-1693

File Name : 14126
Site Code : 14126
Start Date : 3/31/2016
Page No : 3

	New Park Avenue From North					New Britain Avenue From East					Railroad Rd From South					New Britain Avenue From West					
Start Time	Right	Thru	Left	Peds	App. Total	Right	Thru	Left	Peds	App. Total	Right	Thru	Left	Peds	App. Total	Right	Thru	Left	Peds	App. Total	Int. Total
Peak Hour Analysis From 04:00 PM to 05:45 PM - Peak 1 of 1																					
Peak Hour for Each Approach Begins at:																					
	04:45 PM					04:30 PM					04:00 PM					04:30 PM					
+0 mins.	85	**1**	106	0	192	93	183	**1**	1	278	**2**	**1**	0	1	4	**1**	203	**72**	0	**276**	
+15 mins.	73	0	**115**	1	189	**107**	179	0	**2**	288	0	0	0	**5**	**5**	1	**204**	68	**1**	274	
+30 mins.	86	1	89	0	176	79	209	0	1	289	1	0	0	1	2	0	170	59	0	229	
+45 mins.	**93**	0	113	**3**	**209**	89	**216**	0	1	**306**	0	0	0	4	4	1	196	66	0	263	
Total Volume	337	2	423	4	766	368	787	1	5	1161	3	1	0	11	15	3	773	265	1	1042	
% App. Total	44	0.3	55.2	0.5		31.7	67.8	0.1	0.4		20	6.7	0	73.3		0.3	74.2	25.4	0.1		
PHF	.906	.500	.920	.333	.916	.860	.911	.250	.625	.949	.375	.250	.000	.550	.750	.750	.947	.920	.250	.944	

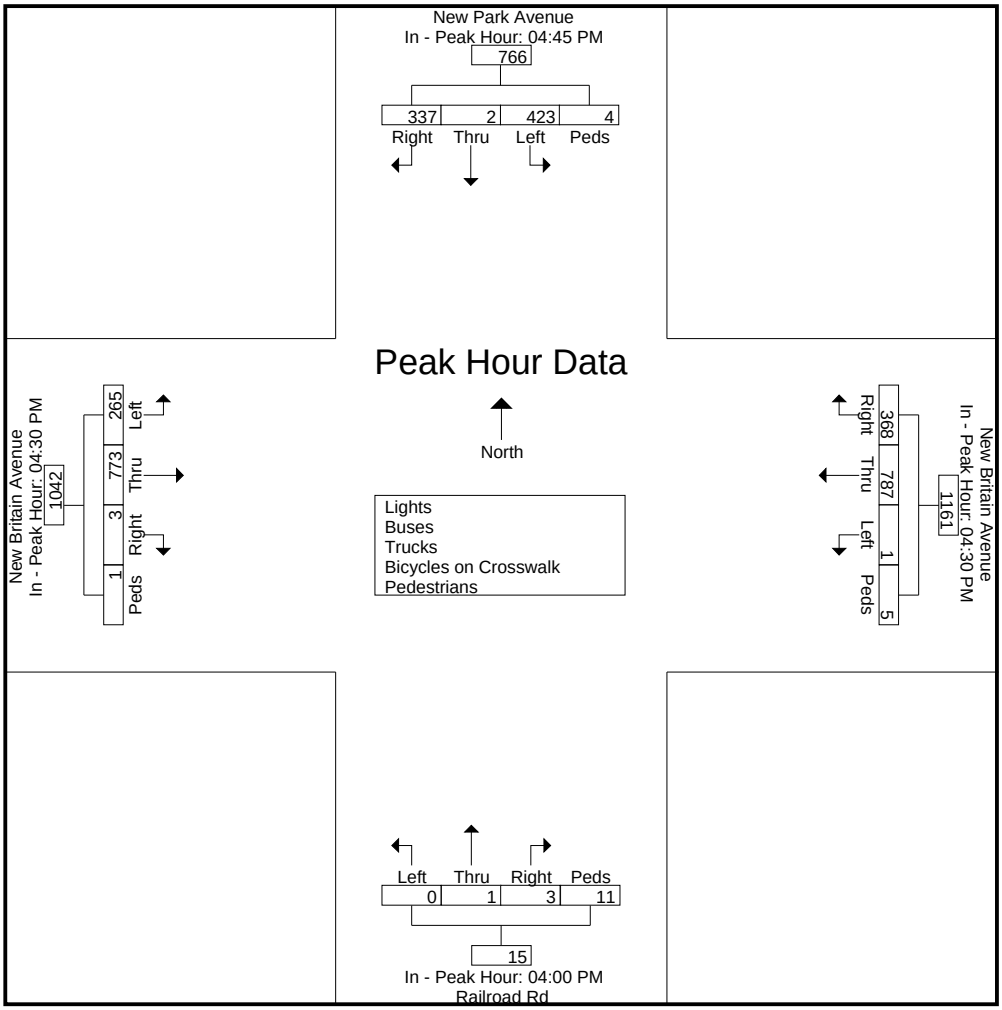

Connecticut Counts LLC

Kensington, Connecticut 06037
(860) 828-1693

New Park Ave at New Britain Ave/Railroad
West Hartford, Connecticut

File Name : 14127
Site Code : 14127
Start Date : 4/2/2016
Page No : 1

Groups Printed- Lights - Buses - Trucks - Bicycles on Crosswalk - Pedestrians

	New Park Avenue From North					New Britain Avenue From East					Railroad Rd From South					New Britain Avenue From West					
Start Time	Right	Thru	Left	Peds	App. Total	Right	Thru	Left	Peds	App. Total	Right	Thru	Left	Peds	App. Total	Right	Thru	Left	Peds	App. Total	Int. Total
11:00 AM	76	0	101	0	177	83	130	0	0	213	0	0	0	2	2	0	129	79	1	209	601
11:15 AM	79	0	83	0	162	71	157	0	0	228	0	0	0	1	1	0	162	55	0	217	608
11:30 AM	63	0	92	1	156	95	147	0	0	242	1	0	0	1	2	0	148	58	0	206	606
11:45 AM	65	0	74	2	141	103	173	0	0	276	0	0	0	1	1	0	174	74	1	249	667
Total	283	0	350	3	636	352	607	0	0	959	1	0	0	5	6	0	613	266	2	881	2482
12:00 PM	74	0	88	0	162	101	183	0	1	285	0	0	0	0	0	0	144	71	2	217	664
12:15 PM	62	0	86	0	148	85	161	0	0	246	0	0	0	0	0	0	161	66	0	227	621
12:30 PM	60	0	78	0	138	93	178	1	2	274	0	0	0	0	0	0	144	66	0	210	622
12:45 PM	80	0	115	1	196	73	138	0	0	211	0	0	0	0	0	0	142	55	0	197	604
Total	276	0	367	1	644	352	660	1	3	1016	0	0	0	0	0	0	591	258	2	851	2511
Grand Total	559	0	717	4	1280	704	1267	1	3	1975	1	0	0	5	6	0	1204	524	4	1732	4993
Apprch %	43.7	0	56	0.3		35.6	64.2	0.1	0.2		16.7	0	0	83.3		0	69.5	30.3	0.2		
Total %	11.2	0	14.4	0.1	25.6	14.1	25.4	0	0.1	39.6	0	0	0	0.1	0.1	0	24.1	10.5	0.1	34.7	
Lights	550	0	708	0	1258	700	1251										1190				
% Lights	98.4	0	98.7	0	98.3	99.4	98.7	100	0	98.8	100	0	0	0	16.7	0	98.8	98.9	0	98.6	98.5
Buses	4	0	1	0	5	0	5	0	0	5	0	0	0	0	0	0	5	4	0	9	19
% Buses	0.7	0	0.1	0	0.4	0	0.4	0	0	0.3	0	0	0	0	0	0	0.4	0.8	0	0.5	0.4
Trucks	5	0	8	0	13	4	11	0	0	15	0	0	0	0	0	0	9	2	0	11	39
% Trucks	0.9	0	1.1	0	1	0.6	0.9	0	0	0.8	0	0	0	0	0	0	0.7	0.4	0	0.6	0.8
Bicycles on Crosswalk																					
% Bicycles on Crosswalk	0	0	0	0	0	0	0	0	0	0	0	0	0	0	0	0	0	0	0	0	0
Pedestrians	0	0	0	4	4	0	0	0	3	3	0	0	0	5	5	0	0	0	4	4	16
% Pedestrians	0	0	0	100	0.3	0	0	0	100	0.2	0	0	0	100	83.3	0	0	0	100	0.2	0.3

Connecticut Counts LLC

Kensington, Connecticut 06037
(860) 828-1693

File Name : 14127
Site Code : 14127
Start Date : 4/2/2016
Page No : 2

	New Park Avenue From North					New Britain Avenue From East					Railroad Rd From South					New Britain Avenue From West					
Start Time	Right	Thru	Left	Peds	App. Total	Right	Thru	Left	Peds	App. Total	Right	Thru	Left	Peds	App. Total	Right	Thru	Left	Peds	App. Total	Int. Total
Peak Hour Analysis From 11:00 AM to 12:45 PM - Peak 1 of 1																					
Peak Hour for Entire Intersection Begins at 11:45 AM																					
11:45 AM	65	0	74	**2**	141	**103**	173	0	0	276	0	0	0	**1**	**1**	0	**174**	**74**	1	**249**	**667**
12:00 PM	**74**	0	**88**	0	**162**	101	**183**	0	1	**285**	0	0	0	0	0	0	144	71	**2**	217	664
12:15 PM	62	0	86	0	148	85	161	0	0	246	0	0	0	0	0	0	161	66	0	227	621
12:30 PM	60	0	78	0	138	93	178	**1**	**2**	274	0	0	0	0	0	0	144	66	0	210	622
Total Volume	261	0	326	2	589	382	695	1	3	1081	0	0	0	1	1	0	623	277	3	903	2574
% App. Total	44.3	0	55.3	0.3		35.3	64.3	0.1	0.3		0	0	0	100		0	69	30.7	0.3		
PHF	.882	.000	.926	.250	.909	.927	.949	.250	.375	.948	.000	.000	.000	.250	.250	.000	.895	.936	.375	.907	.965

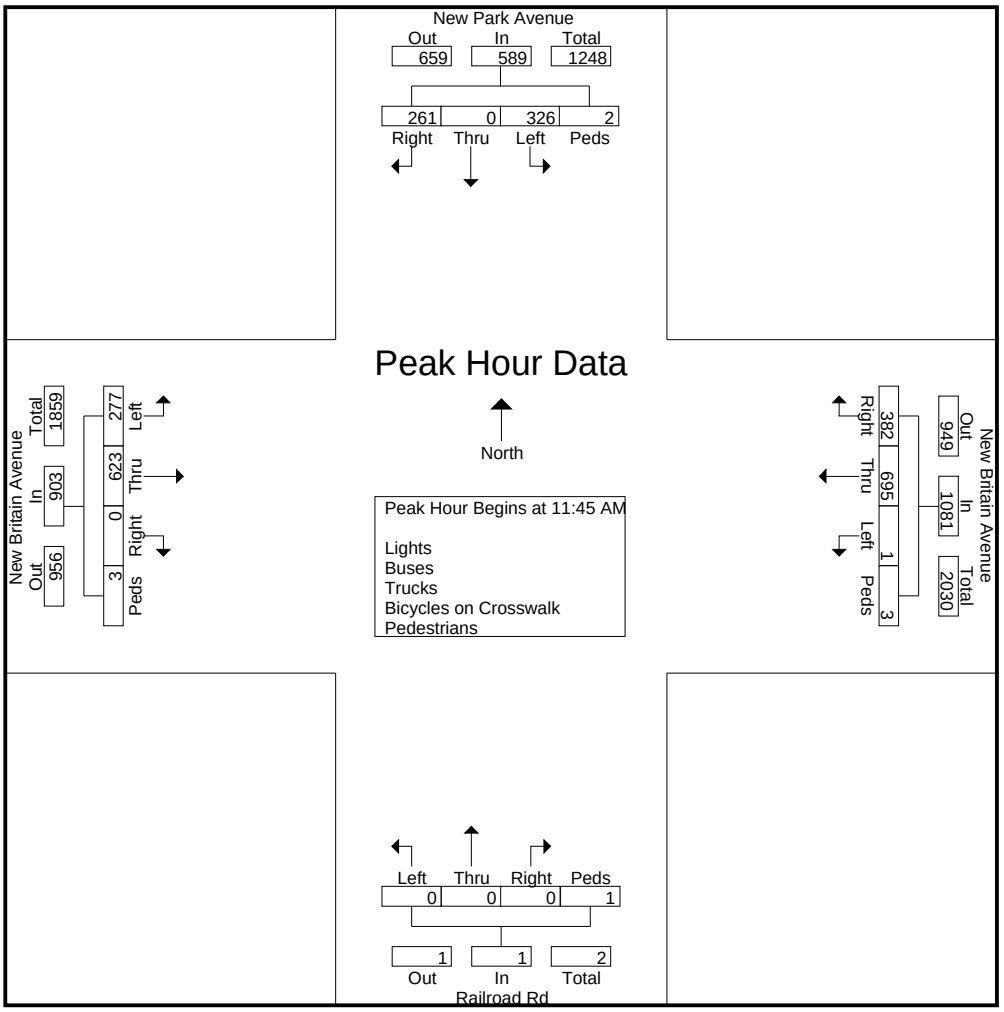

Connecticut Counts LLC

Kensington, Connecticut 06037
(860) 828-1693

File Name : 14127
Site Code : 14127
Start Date : 4/2/2016
Page No : 3

	New Park Avenue From North					New Britain Avenue From East					Railroad Rd From South					New Britain Avenue From West					
Start Time	Right	Thru	Left	Peds	App. Total	Right	Thru	Left	Peds	App. Total	Right	Thru	Left	Peds	App. Total	Right	Thru	Left	Peds	App. Total	Int. Total
Peak Hour Analysis From 11:00 AM to 12:45 PM - Peak 1 of 1																					
Peak Hour for Each Approach Begins at:																					
	12:00 PM					11:45 AM					11:00 AM					11:45 AM					
+0 mins.	74	0	88	0	162	**103**	173	0	0	276	0	0	0	**2**	**2**	0	**174**	**74**	1	**249**	
+15 mins.	62	0	86	0	148	101	**183**	0	1	**285**	0	0	0	1	1	0	144	71	**2**	217	
+30 mins.	60	0	78	0	138	85	161	0	0	246	**1**	0	0	1	2	0	161	66	0	227	
+45 mins.	**80**	0	**115**	**1**	**196**	93	178	**1**	**2**	274	0	0	0	1	1	0	144	66	0	210	
Total Volume	276	0	367	1	644	382	695	1	3	1081	1	0	0	5	6	0	623	277	3	903	
% App. Total	42.9	0	57	0.2		35.3	64.3	0.1	0.3		16.7	0	0	83.3		0	69	30.7	0.3		
PHF	.863	.000	.798	.250	.821	.927	.949	.250	.375	.948	.250	.000	.000	.625	.750	.000	.895	.936	.375	.907	

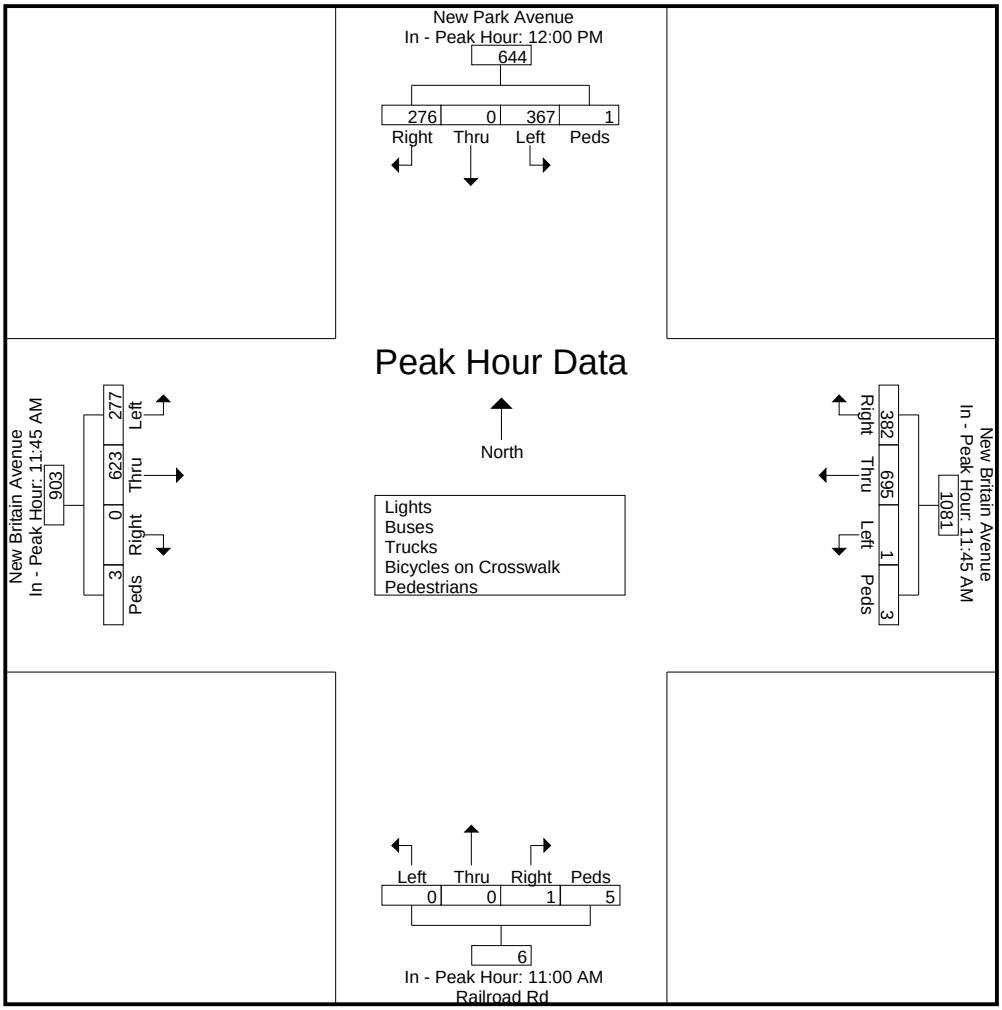

Connecticut Counts LLC

Kensington, Connecticut 06037
(860) 828-1693

New Park Avenue at Talcott Road
West Hartford, Connecticut

File Name : 14128
Site Code : 14128
Start Date : 3/31/2016
Page No : 1

Groups Printed- Unshifted - Bank 1 - Bank 2

	New Park Avenue From North					From East					New Park Avenue From South					Talcott Road From West					
Start Time	Right	Thru	Left	Peds	App. Total	Right	Thru	Left	Peds	App. Total	Right	Thru	Left	Peds	App. Total	Right	Thru	Left	Peds	App. Total	Int. Total
07:00 AM	23	50	0	0	73	0	0	0	0	0	0	95	11	0	106	5	0	14	0	19	198
07:15 AM	31	57	0	0	88	0	0	0	0	0	0	133	18	0	151	14	0	27	1	42	281
07:30 AM	22	61	0	0	83	0	0	0	0	0	0	154	13	0	167	12	1	28	0	41	291
07:45 AM	30	64	0	0	94	0	0	0	0	0	0	191	28	0	219	28	0	43	1	72	385
Total	106	232	0	0	338	0	0	0	0	0	0	573	70	0	643	59	1	112	2	174	1155
08:00 AM	22	81	0	0	103	0	0	0	0	0	0	174	22	0	196	16	0	32	0	48	347
08:15 AM	35	80	0	0	115	0	0	0	0	0	0	163	24	0	187	18	0	40	0	58	360
08:30 AM	27	85	0	0	112	0	0	0	0	0	0	168	16	0	184	17	0	38	0	55	351
08:45 AM	29	81	0	0	110	0	0	0	0	0	0	139	14	0	153	19	0	44	1	64	327
Total	113	327	0	0	440	0	0	0	0	0	0	644	76	0	720	70	0	154	1	225	1385
Grand Total	219	559	0	0	778	0	0	0	0	0	0	1217	146	0	1363	129	1	266	3	399	2540
Apprch %	28.1	71.9	0	0		0	0	0	0		0	89.3	10.7	0		32.3	0.3	66.7	0.8		
Total %	8.6	22	0	0	30.6	0	0	0	0	0	0	47.9	5.7	0	53.7	5.1	0	10.5	0.1	15.7	
Unshifted	211	537	0	0	748	0	0	0	0	0	0	1186									
% Unshifted	96.3	96.1	0	0	96.1	0	0	0	0	0	0	97.5	98.6	0	97.6	98.4	100	96.6	100	97.2	97.1
Bank 1	8	10	0	0	18	0	0	0	0	0	0	12	2	0	14	1	0	3	0	4	36
% Bank 1	3.7	1.8	0	0	2.3	0	0	0	0	0	0	1	1.4	0	1	0.8	0	1.1	0	1	1.4
Bank 2	0	12	0	0	12	0	0	0	0	0	0	19	0	0	19	1	0	6	0	7	38
% Bank 2	0	2.1	0	0	1.5	0	0	0	0	0	0	1.6	0	0	1.4	0.8	0	2.3	0	1.8	1.5

Connecticut Counts LLC

Kensington, Connecticut 06037
(860) 828-1693

File Name : 14128
Site Code : 14128
Start Date : 3/31/2016
Page No : 2

	New Park Avenue From North					From East					New Park Avenue From South					Talcott Road From West					
Start Time	Right	Thru	Left	Peds	App. Total	Right	Thru	Left	Peds	App. Total	Right	Thru	Left	Peds	App. Total	Right	Thru	Left	Peds	App. Total	Int. Total
Peak Hour Analysis From 07:00 AM to 08:45 AM - Peak 1 of 1																					
Peak Hour for Entire Intersection Begins at 07:45 AM																					
07:45 AM	30	64	0	0	94	0	0	0	0	0	0	**191**	**28**	0	**219**	**28**	0	**43**	**1**	**72**	**385**
08:00 AM	22	81	0	0	103	0	0	0	0	0	0	174	22	0	196	16	0	32	0	48	347
08:15 AM	**35**	80	0	0	**115**	0	0	0	0	0	0	163	24	0	187	18	0	40	0	58	360
08:30 AM	27	**85**	0	0	112	0	0	0	0	0	0	168	16	0	184	17	0	38	0	55	351
Total Volume	114	310	0	0	424	0	0	0	0	0	0	696	90	0	786	79	0	153	1	233	1443
% App. Total	26.9	73.1	0	0		0	0	0	0		0	88.5	11.5	0		33.9	0	65.7	0.4		
PHF	.814	.912	.000	.000	.922	.000	.000	.000	.000	.000	.000	.911	.804	.000	.897	.705	.000	.890	.250	.809	.937

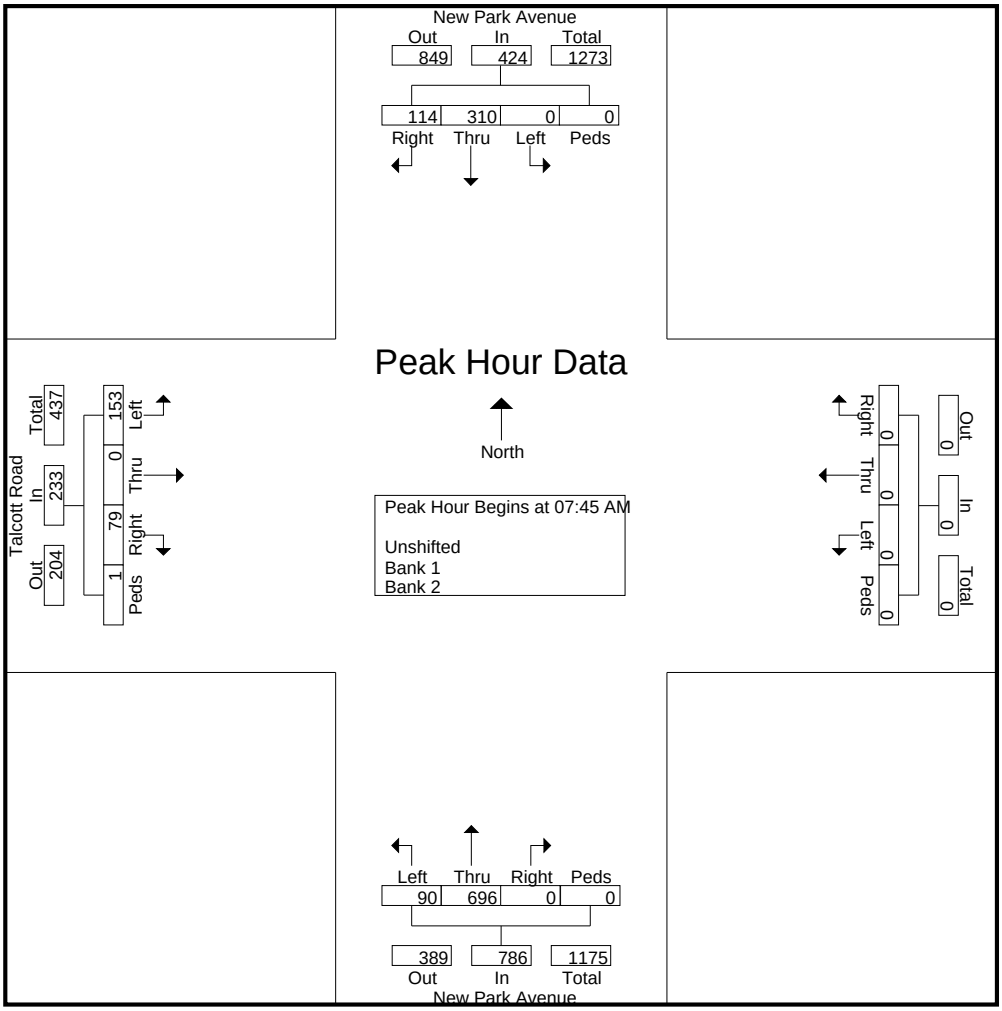

Connecticut Counts LLC

Kensington, Connecticut 06037
(860) 828-1693

File Name : 14128
Site Code : 14128
Start Date : 3/31/2016
Page No : 3

	New Park Avenue From North					From East					New Park Avenue From South					Talcott Road From West					
Start Time	Right	Thru	Left	Peds	App. Total	Right	Thru	Left	Peds	App. Total	Right	Thru	Left	Peds	App. Total	Right	Thru	Left	Peds	App. Total	Int. Total
Peak Hour Analysis From 07:00 AM to 08:45 AM - Peak 1 of 1																					
Peak Hour for Each Approach Begins at:																					
	08:00 AM					07:00 AM					07:45 AM					07:45 AM					
+0 mins.	22	81	0	0	103	0	0	0	0	0	0	**191**	**28**	0	**219**	**28**	0	**43**	**1**	**72**	
+15 mins.	**35**	80	0	0	**115**	0	0	0	0	0	0	174	22	0	196	16	0	32	0	48	
+30 mins.	27	**85**	0	0	112	0	0	0	0	0	0	163	24	0	187	18	0	40	0	58	
+45 mins.	29	81	0	0	110	0	0	0	0	0	0	168	16	0	184	17	0	38	0	55	
Total Volume	113	327	0	0	440	0	0	0	0	0	0	696	90	0	786	79	0	153	1	233	
% App. Total	25.7	74.3	0	0		0	0	0	0		0	88.5	11.5	0		33.9	0	65.7	0.4		
PHF	.807	.962	.000	.000	.957	.000	.000	.000	.000	.000	.000	.911	.804	.000	.897	.705	.000	.890	.250	.809	

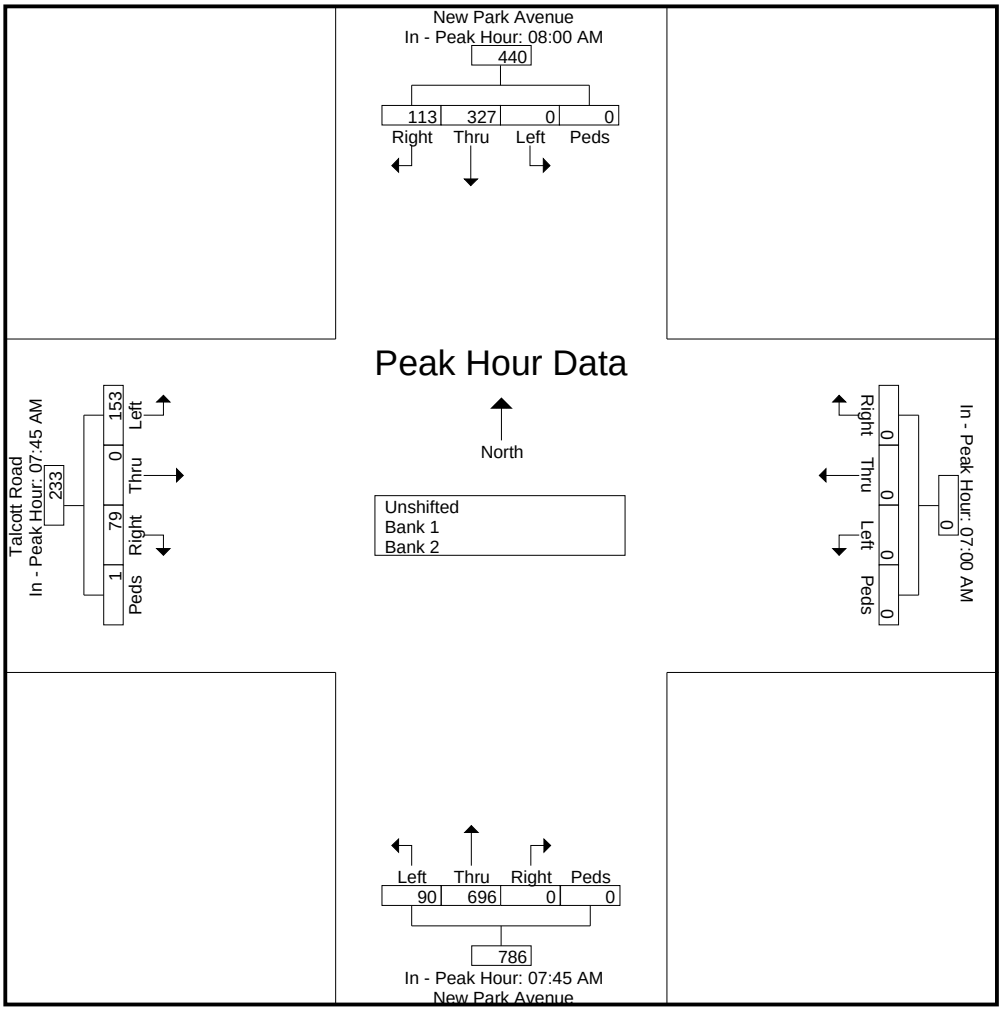

Connecticut Counts LLC

Kensington, Connecticut 06037
(860) 828-1693

New Park Avenue at Talcott Road
West Hartford, Connecticut

File Name : 14129
Site Code : 14129
Start Date : 3/31/2016
Page No : 1

Groups Printed- Unshifted - Bank 1 - Bank 2

	New Park Avenue From North					From East					New Park Avenue From South					Talcott Road From West					
Start Time	Right	Thru	Left	Peds	App. Total	Right	Thru	Left	Peds	App. Total	Right	Thru	Left	Peds	App. Total	Right	Thru	Left	Peds	App. Total	Int. Total
04:00 PM	34	143	0	0	177	0	0	0	0	0	0	124	22	0	146	21	0	35	1	57	380
04:15 PM	50	155	0	0	205	0	1	0	0	1	0	111	18	0	129	23	0	37	2	62	397
04:30 PM	57	143	0	0	200	0	0	0	0	0	0	108	33	0	141	28	0	35	1	64	405
04:45 PM	61	167	0	0	228	0	0	0	0	0	0	159	32	0	191	34	0	32	0	66	485
Total	202	608	0	0	810	0	1	0	0	1	0	502	105	0	607	106	0	139	4	249	1667
05:00 PM	67	188	0	0	255	0	0	0	0	0	0	118	25	0	143	19	0	35	0	54	452
05:15 PM	51	160	0	0	211	0	0	0	0	0	0	129	26	0	155	23	0	29	2	54	420
05:30 PM	40	194	0	0	234	0	0	0	0	0	0	97	31	0	128	18	0	25	0	43	405
05:45 PM	49	126	0	0	175	0	0	0	0	0	0	123	22	1	146	18	1	30	1	50	371
Total	207	668	0	0	875	0	0	0	0	0	0	467	104	1	572	78	1	119	3	201	1648
Grand Total	409	1276	0	0	1685	0	1	0	0	1	0	969	209	1	1179	184	1	258	7	450	3315
Apprch %	24.3	75.7	0	0		0	100	0	0		0	82.2	17.7	0.1		40.9	0.2	57.3	1.6		
Total %	12.3	38.5	0	0	50.8	0	0	0	0	0	0	29.2	6.3	0	35.6	5.6	0	7.8	0.2	13.6	
Unshifted	406	1261																			
% Unshifted	99.3	98.8	0	0	98.9	0	100	0	0	100	0	99	99.5	100	99.1	99.5	100	97.3	100	98.2	98.9
Bank 1	2	7	0	0	9	0	0	0	0	0	0	3	1	0	4	1	0	4	0	5	18
% Bank 1	0.5	0.5	0	0	0.5	0	0	0	0	0	0	0.3	0.5	0	0.3	0.5	0	1.6	0	1.1	0.5
Bank 2	1	8	0	0	9	0	0	0	0	0	0	7	0	0	7	0	0	3	0	3	19
% Bank 2	0.2	0.6	0	0	0.5	0	0	0	0	0	0	0.7	0	0	0.6	0	0	1.2	0	0.7	0.6

Connecticut Counts LLC

Kensington, Connecticut 06037
(860) 828-1693

File Name : 14129
Site Code : 14129
Start Date : 3/31/2016
Page No : 2

	New Park Avenue From North					From East					New Park Avenue From South					Talcott Road From West					
Start Time	Right	Thru	Left	Peds	App. Total	Right	Thru	Left	Peds	App. Total	Right	Thru	Left	Peds	App. Total	Right	Thru	Left	Peds	App. Total	Int. Total
Peak Hour Analysis From 04:00 PM to 05:45 PM - Peak 1 of 1																					
Peak Hour for Entire Intersection Begins at 04:30 PM																					
04:30 PM	57	143	0	0	200	0	0	0	0	0	0	108	**33**	0	141	28	0	**35**	1	64	405
04:45 PM	61	167	0	0	228	0	0	0	0	0	0	**159**	32	0	**191**	**34**	0	32	0	**66**	**485**
05:00 PM	**67**	**188**	0	0	**255**	0	0	0	0	0	0	118	25	0	143	19	0	35	0	54	452
05:15 PM	51	160	0	0	211	0	0	0	0	0	0	129	26	0	155	23	0	29	**2**	54	420
Total Volume	236	658	0	0	894	0	0	0	0	0	0	514	116	0	630	104	0	131	3	238	1762
% App. Total	26.4	73.6	0	0		0	0	0	0		0	81.6	18.4	0		43.7	0	55	1.3		
PHF	.881	.875	.000	.000	.876	.000	.000	.000	.000	.000	.000	.808	.879	.000	.825	.765	.000	.936	.375	.902	.908

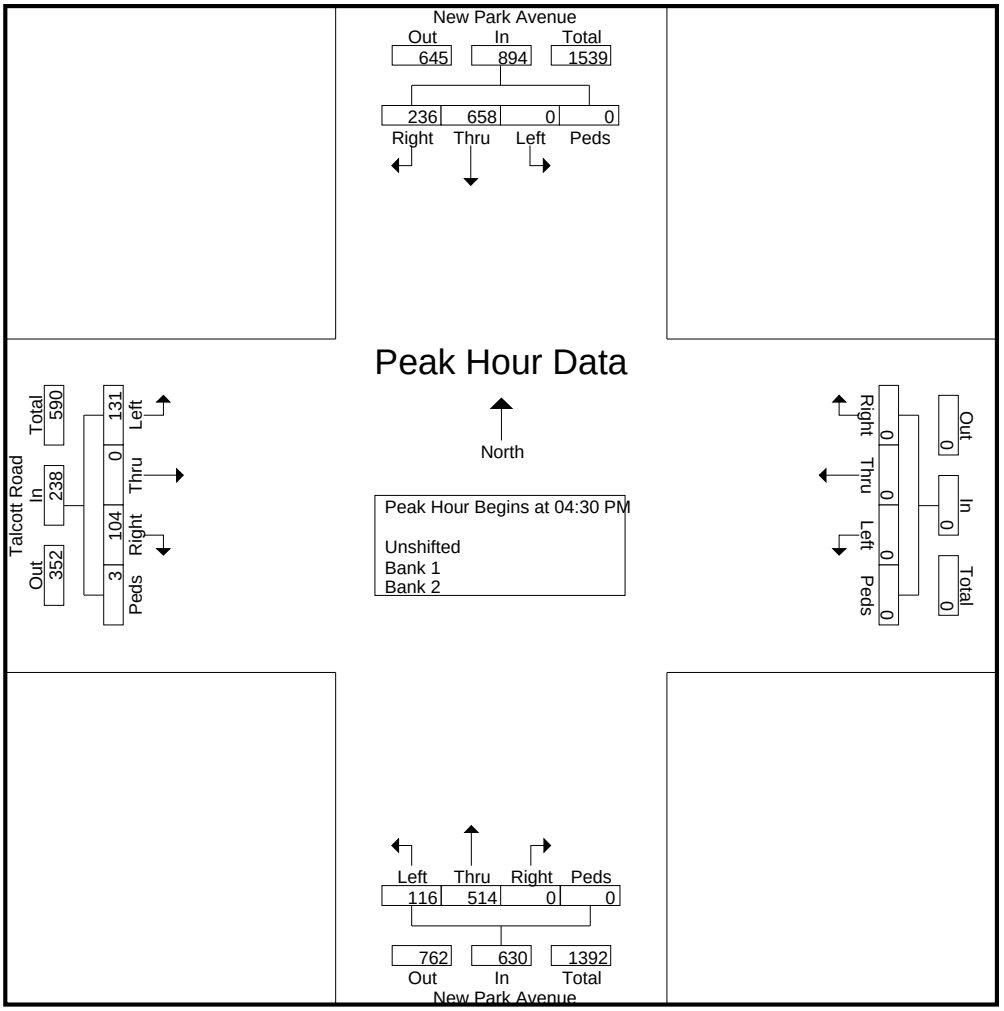

Connecticut Counts LLC

Kensington, Connecticut 06037
(860) 828-1693

File Name : 14129
Site Code : 14129
Start Date : 3/31/2016
Page No : 3

	New Park Avenue From North					From East					New Park Avenue From South					Talcott Road From West					
Start Time	Right	Thru	Left	Peds	App. Total	Right	Thru	Left	Peds	App. Total	Right	Thru	Left	Peds	App. Total	Right	Thru	Left	Peds	App. Total	Int. Total
Peak Hour Analysis From 04:00 PM to 05:45 PM - Peak 1 of 1																					
Peak Hour for Each Approach Begins at:																					
	04:45 PM					04:00 PM					04:30 PM					04:00 PM					
+0 mins.	61	167	0	0	228	0	0	0	0	0	0	108	**33**	0	141	21	0	35	1	57	
+15 mins.	**67**	188	0	0	**255**	0	**1**	0	0	**1**	0	**159**	32	0	**191**	23	0	**37**	**2**	62	
+30 mins.	51	160	0	0	211	0	0	0	0	0	0	118	25	0	143	28	0	35	1	64	
+45 mins.	40	**194**	0	0	234	0	0	0	0	0	0	129	26	0	155	**34**	0	32	0	**66**	
Total Volume	219	709	0	0	928	0	1	0	0	1	0	514	116	0	630	106	0	139	4	249	
% App. Total	23.6	76.4	0	0		0	100	0	0		0	81.6	18.4	0		42.6	0	55.8	1.6		
PHF	.817	.914	.000	.000	.910	.000	.250	.000	.000	.250	.000	.808	.879	.000	.825	.779	.000	.939	.500	.943	

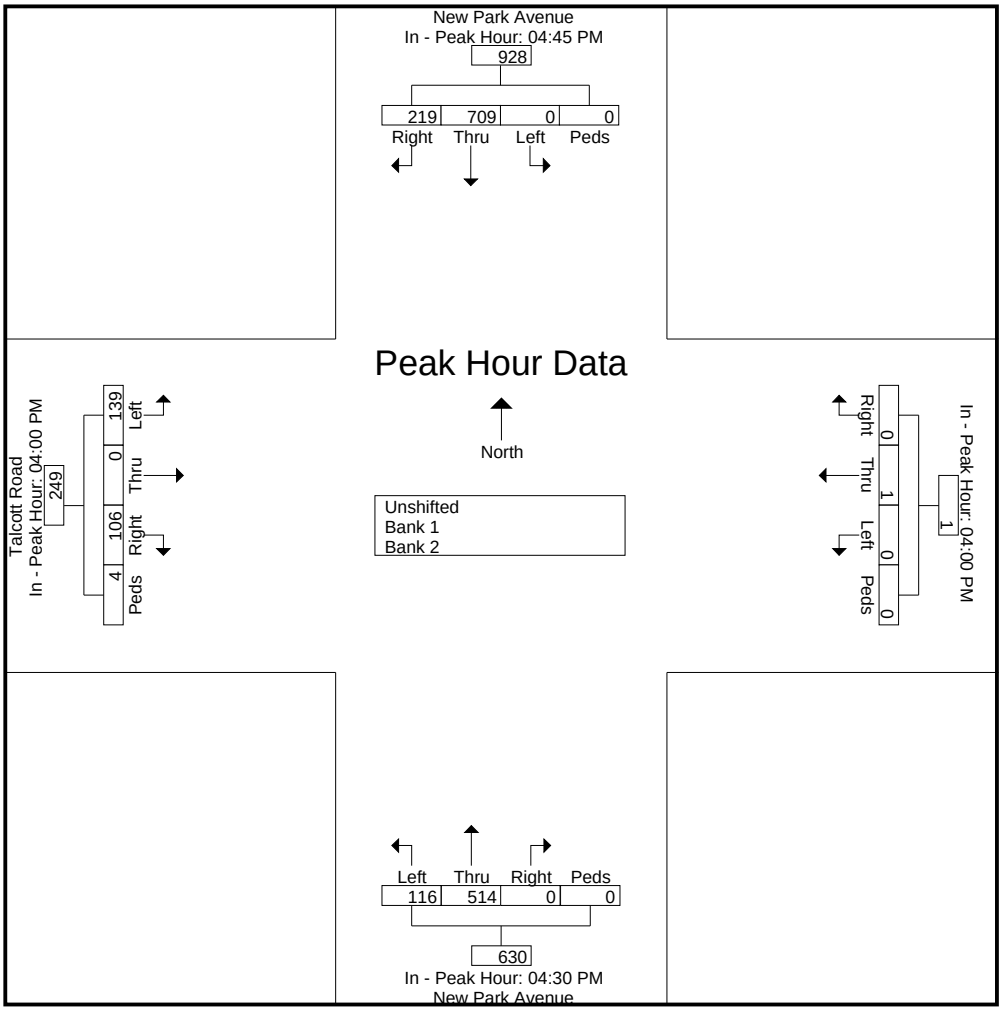

Connecticut Counts LLC

Kensington, Connecticut 06037
(860) 828-1693

New Park Avenue at Talcott Road
West Hartford, Connecticut

File Name : 14130
Site Code : 14130
Start Date : 4/2/2016
Page No : 1

Groups Printed- Unshifted - Bank 1 - Bank 2

	New Park Avenue From North					From East					New Park Avenue From South					Talcott Road From West					
Start Time	Right	Thru	Left	Peds	App. Total	Right	Thru	Left	Peds	App. Total	Right	Thru	Left	Peds	App. Total	Right	Thru	Left	Peds	App. Total	Int. Total
11:00 AM	50	143	0	0	193	0	0	0	0	0	0	149	27	0	176	28	0	36	0	64	433
11:15 AM	56	150	2	0	208	0	0	0	0	0	0	131	20	0	151	17	0	42	0	59	418
11:30 AM	66	165	0	0	231	0	0	0	0	0	0	169	21	0	190	23	0	40	1	64	485
11:45 AM	40	121	0	0	161	0	0	0	0	0	0	142	13	0	155	19	0	32	2	53	369
Total	212	579	2	0	793	0	0	0	0	0	0	591	81	0	672	87	0	150	3	240	1705
12:00 PM	44	149	0	0	193	0	1	0	0	1	0	151	23	0	174	17	0	34	1	52	420
12:15 PM	40	168	1	0	209	0	0	0	0	0	0	145	11	0	156	16	0	27	0	43	408
12:30 PM	42	154	1	0	197	0	0	0	0	0	0	139	14	0	153	16	0	23	0	39	389
12:45 PM	42	173	0	0	215	0	0	0	0	0	0	131	13	0	144	16	0	33	1	50	409
Total	168	644	2	0	814	0	1	0	0	1	0	566	61	0	627	65	0	117	2	184	1626
Grand Total	380	1223	4	0	1607	0	1	0	0	1	0	1157	142	0	1299	152	0	267	5	424	3331
Apprch %	23.6	76.1	0.2	0		0	100	0	0		0	89.1	10.9	0		35.8	0	63	1.2		
Total %	11.4	36.7	0.1	0	48.2	0	0	0	0	0	0	34.7	4.3	0	39	4.6	0	8	0.2	12.7	
Unshifted	377	1217										1152									
% Unshifted	99.2	99.5	100	0	99.4	0	100	0	0	100	0	99.6	100	0	99.6	100	0	99.6	100	99.8	99.5
Bank 1	3	2	0	0	5	0	0	0	0	0	0	1	0	0	1	0	0	0	0	0	6
% Bank 1	0.8	0.2	0	0	0.3	0	0	0	0	0	0	0.1	0	0	0.1	0	0	0	0	0	0.2
Bank 2	0	4	0	0	4	0	0	0	0	0	0	4	0	0	4	0	0	1	0	1	9
% Bank 2	0	0.3	0	0	0.2	0	0	0	0	0	0	0.3	0	0	0.3	0	0	0.4	0	0.2	0.3

Connecticut Counts LLC

Kensington, Connecticut 06037
(860) 828-1693

File Name : 14130
Site Code : 14130
Start Date : 4/2/2016
Page No : 2

	New Park Avenue From North					From East					New Park Avenue From South					Talcott Road From West					
Start Time	Right	Thru	Left	Peds	App. Total	Right	Thru	Left	Peds	App. Total	Right	Thru	Left	Peds	App. Total	Right	Thru	Left	Peds	App. Total	Int. Total
Peak Hour Analysis From 11:00 AM to 12:45 PM - Peak 1 of 1																					
Peak Hour for Entire Intersection Begins at 11:00 AM																					
11:00 AM	50	143	0	0	193	0	0	0	0	0	0	149	**27**	0	176	**28**	0	36	0	**64**	433
11:15 AM	56	150	**2**	0	208	0	0	0	0	0	0	131	20	0	151	17	0	**42**	0	59	418
11:30 AM	**66**	**165**	0	0	**231**	0	0	0	0	0	0	**169**	21	0	**190**	23	0	40	1	64	**485**
11:45 AM	40	121	0	0	161	0	0	0	0	0	0	142	13	0	155	19	0	32	**2**	53	369
Total Volume	212	579	2	0	793	0	0	0	0	0	0	591	81	0	672	87	0	150	3	240	1705
% App. Total	26.7	73	0.3	0		0	0	0	0		0	87.9	12.1	0		36.2	0	62.5	1.2		
PHF	.803	.877	.250	.000	.858	.000	.000	.000	.000	.000	.000	.874	.750	.000	.884	.777	.000	.893	.375	.938	.879

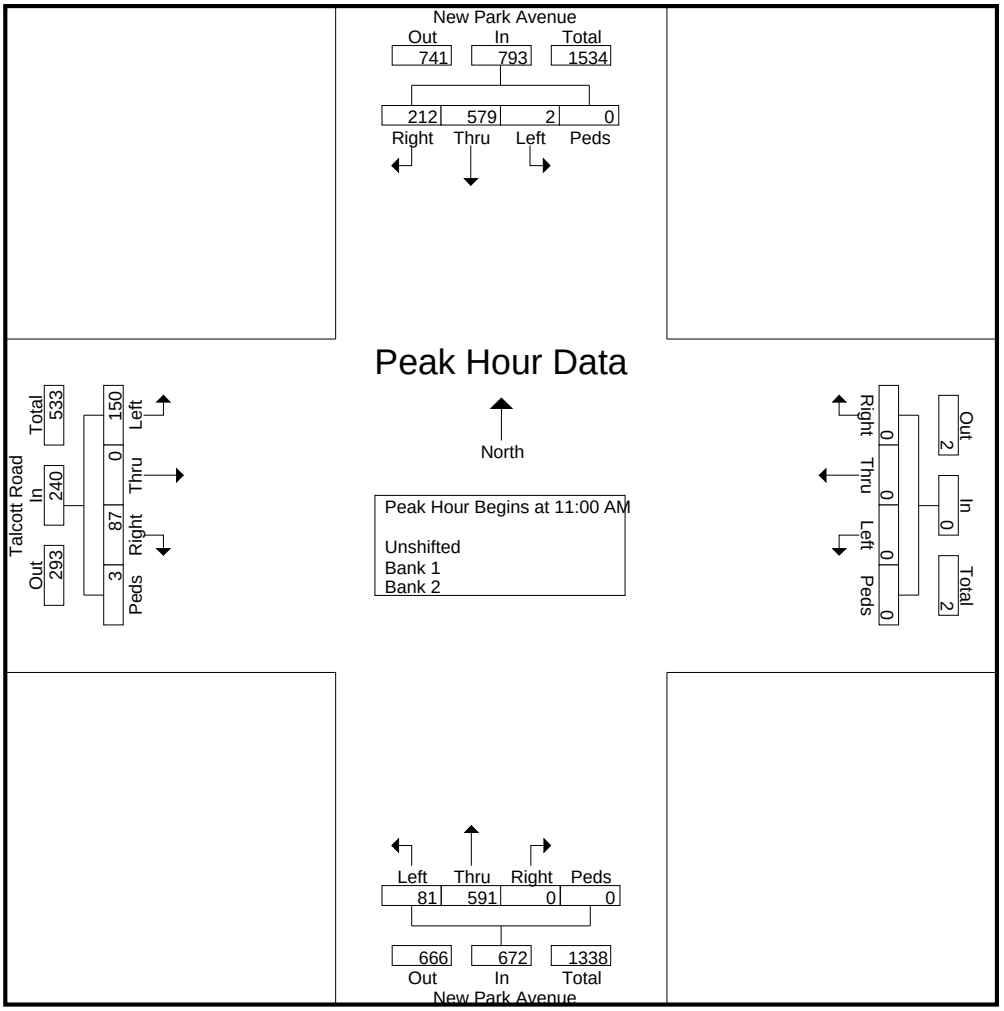

Connecticut Counts LLC

Kensington, Connecticut 06037
(860) 828-1693

File Name : 14130
Site Code : 14130
Start Date : 4/2/2016
Page No : 3

	New Park Avenue From North					From East					New Park Avenue From South					Talcott Road From West					
Start Time	Right	Thru	Left	Peds	App. Total	Right	Thru	Left	Peds	App. Total	Right	Thru	Left	Peds	App. Total	Right	Thru	Left	Peds	App. Total	Int. Total
Peak Hour Analysis From 11:00 AM to 12:45 PM - Peak 1 of 1																					
Peak Hour for Each Approach Begins at:																					
	12:00 PM					11:15 AM					11:30 AM					11:00 AM					
+0 mins.	**44**	149	0	0	193	0	0	0	0	0	0	**169**	21	0	**190**	**28**	0	36	0	**64**	
+15 mins.	40	168	**1**	0	209	0	0	0	0	0	0	142	13	0	155	17	0	**42**	0	59	
+30 mins.	42	154	1	0	197	0	0	0	0	0	0	151	**23**	0	174	23	0	40	1	64	
+45 mins.	42	**173**	0	0	**215**	0	**1**	0	0	**1**	0	145	11	0	156	19	0	32	**2**	53	
Total Volume	168	644	2	0	814	0	1	0	0	1	0	607	68	0	675	87	0	150	3	240	
% App. Total	20.6	79.1	0.2	0		0	100	0	0		0	89.9	10.1	0		36.2	0	62.5	1.2		
PHF	.955	.931	.500	.000	.947	.000	.250	.000	.000	.250	.000	.898	.739	.000	.888	.777	.000	.893	.375	.938	

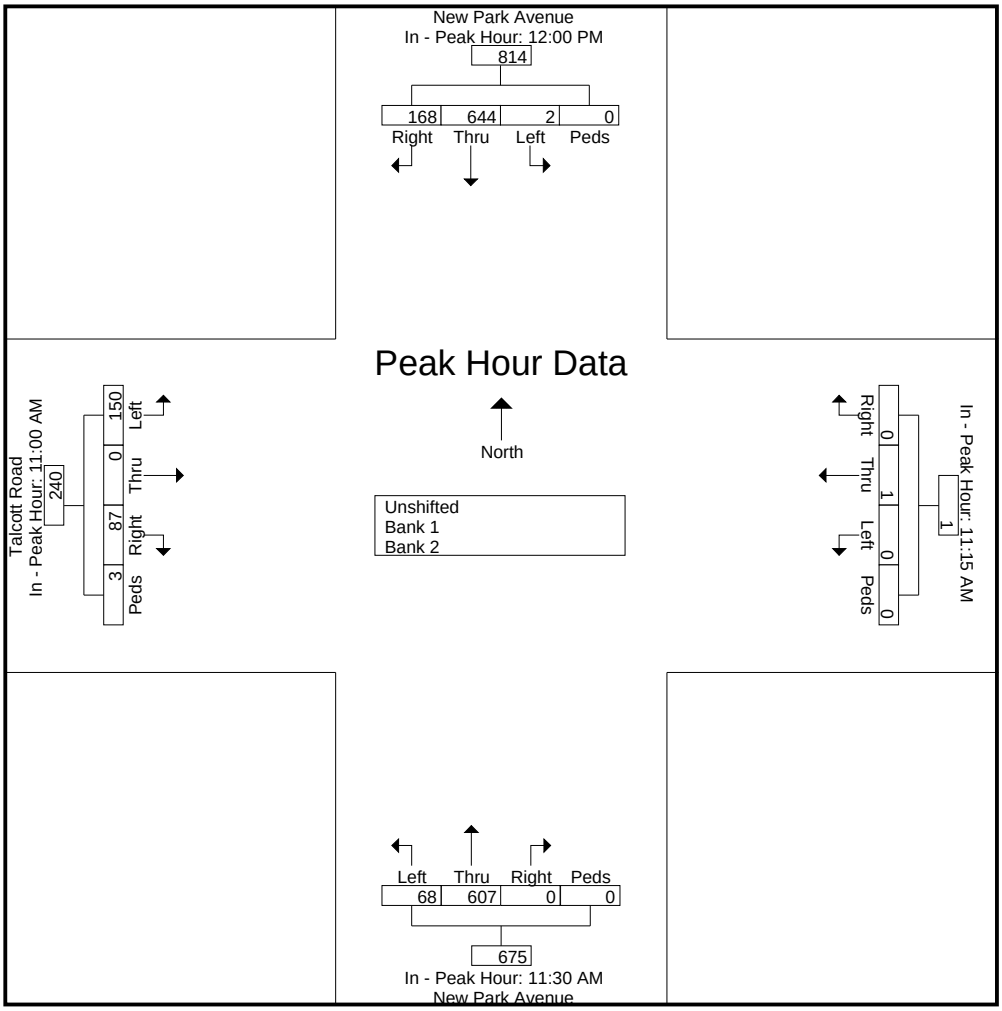

Connecticut Counts LLC

Kensington, Connecticut 06037
(860) 828-1693

New Park Ave at Oakwood Ave/Colt Drive
West Hartford, Connecticut

File Name : 14131
Site Code : 14131
Start Date : 3/31/2016
Page No : 1

Groups Printed- Unshifted - Bank 1 - Bank 2

	New Park Avenue From North					Oakwood Avenue From East					New Park Avenue From South					Colt Drive From West					
Start Time	Right	Thru	Left	Peds	App. Total	Right	Thru	Left	Peds	App. Total	Right	Thru	Left	Peds	App. Total	Right	Thru	Left	Peds	App. Total	Int. Total
07:00 AM	9	66	15	0	90	13	0	7	1	21	18	92	3	0	113	1	0	2	0	3	227
07:15 AM	1	67	12	0	80	20	0	22	0	42	19	139	1	0	159	0	0	2	0	2	283
07:30 AM	3	72	10	1	86	20	0	13	1	34	21	147	3	0	171	0	0	0	3	3	294
07:45 AM	5	79	15	0	99	17	0	16	1	34	27	197	3	0	227	1	0	2	1	4	364
Total	18	284	52	1	355	70	0	58	3	131	85	575	10	0	670	2	0	6	4	12	1168
08:00 AM	12	99	13	0	124	27	0	13	3	43	23	196	1	0	220	5	0	0	2	7	394
08:15 AM	2	110	18	0	130	25	0	17	0	42	26	174	4	0	204	0	0	1	0	1	377
08:30 AM	4	90	11	0	105	16	0	13	2	31	16	170	1	0	187	0	0	0	1	1	324
08:45 AM	2	100	18	0	120	19	0	14	0	33	23	166	1	0	190	0	0	2	0	2	345
Total	20	399	60	0	479	87	0	57	5	149	88	706	7	0	801	5	0	3	3	11	1440
Grand Total	38	683	112	1	834	157	0	115	8	280	173	1281	17	0	1471	7	0	9	7	23	2608
Apprch %	4.6	81.9	13.4	0.1		56.1	0	41.1	2.9		11.8	87.1	1.2	0		30.4	0	39.1	30.4		
Total %	1.5	26.2	4.3	0	32	6	0	4.4	0.3	10.7	6.6	49.1	0.7	0	56.4	0.3	0	0.3	0.3	0.9	
Unshifted	35	672	104	1	812	143	0	97	8	248	165	1249									
% Unshifted	92.1	98.4	92.9	100	97.4	91.1	0	84.3	100	88.6	95.4	97.5	94.1	0	97.2	85.7	0	77.8	100	87	96.2
Bank 1	3	5	4	0	12	8	0	12	0	20	1	14	1	0	16	1	0	2	0	3	51
% Bank 1	7.9	0.7	3.6	0	1.4	5.1	0	10.4	0	7.1	0.6	1.1	5.9	0	1.1	14.3	0	22.2	0	13	2
Bank 2	0	6	4	0	10	6	0	6	0	12	7	18	0	0	25	0	0	0	0	0	47
% Bank 2	0	0.9	3.6	0	1.2	3.8	0	5.2	0	4.3	4	1.4	0	0	1.7	0	0	0	0	0	1.8

Connecticut Counts LLC

Kensington, Connecticut 06037
(860) 828-1693

File Name : 14131
Site Code : 14131
Start Date : 3/31/2016
Page No : 2

	New Park Avenue From North					Oakwood Avenue From East					New Park Avenue From South					Colt Drive From West					
Start Time	Right	Thru	Left	Peds	App. Total	Right	Thru	Left	Peds	App. Total	Right	Thru	Left	Peds	App. Total	Right	Thru	Left	Peds	App. Total	Int. Total
Peak Hour Analysis From 07:00 AM to 08:45 AM - Peak 1 of 1																					
Peak Hour for Entire Intersection Begins at 07:45 AM																					
07:45 AM	5	79	15	0	99	17	0	16	1	34	**27**	**197**	3	0	**227**	1	0	**2**	1	4	364
08:00 AM	**12**	99	13	0	124	**27**	0	13	**3**	**43**	23	196	1	0	220	**5**	0	0	**2**	**7**	**394**
08:15 AM	2	**110**	**18**	0	**130**	25	0	**17**	0	42	26	174	**4**	0	204	0	0	1	0	1	377
08:30 AM	4	90	11	0	105	16	0	13	2	31	16	170	1	0	187	0	0	0	1	1	324
Total Volume	23	378	57	0	458	85	0	59	6	150	92	737	9	0	838	6	0	3	4	13	1459
% App. Total	5	82.5	12.4	0		56.7	0	39.3	4		11	87.9	1.1	0		46.2	0	23.1	30.8		
PHF	.479	.859	.792	.000	.881	.787	.000	.868	.500	.872	.852	.935	.563	.000	.923	.300	.000	.375	.500	.464	.926

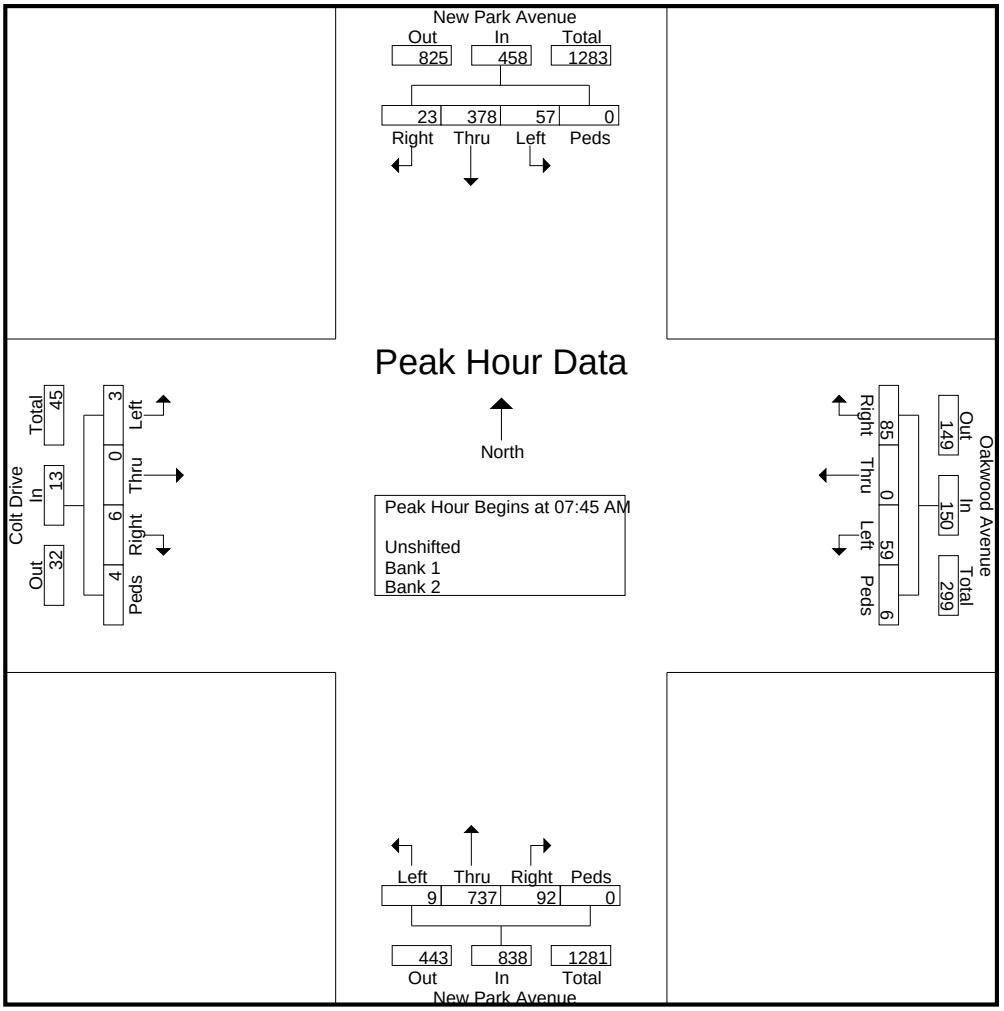

Connecticut Counts LLC

Kensington, Connecticut 06037
(860) 828-1693

File Name : 14131
Site Code : 14131
Start Date : 3/31/2016
Page No : 3

	New Park Avenue From North					Oakwood Avenue From East					New Park Avenue From South					Colt Drive From West					
Start Time	Right	Thru	Left	Peds	App. Total	Right	Thru	Left	Peds	App. Total	Right	Thru	Left	Peds	App. Total	Right	Thru	Left	Peds	App. Total	Int. Total
Peak Hour Analysis From 07:00 AM to 08:45 AM - Peak 1 of 1																					
Peak Hour for Each Approach Begins at:																					
	08:00 AM					07:15 AM					07:45 AM					07:15 AM					
+0 mins.	**12**	99	13	0	124	20	0	**22**	0	42	**27**	**197**	3	0	**227**	0	0	**2**	0	2	
+15 mins.	2	**110**	**18**	0	**130**	20	0	13	1	34	23	196	1	0	220	0	0	0	**3**	3	
+30 mins.	4	90	11	0	105	17	0	16	1	34	26	174	**4**	0	204	1	0	2	1	4	
+45 mins.	2	100	18	0	120	**27**	0	13	**3**	**43**	16	170	1	0	187	**5**	0	0	2	**7**	
Total Volume	20	399	60	0	479	84	0	64	5	153	92	737	9	0	838	6	0	4	6	16	
% App. Total	4.2	83.3	12.5	0		54.9	0	41.8	3.3		11	87.9	1.1	0		37.5	0	25	37.5		
PHF	.417	.907	.833	.000	.921	.778	.000	.727	.417	.890	.852	.935	.563	.000	.923	.300	.000	.500	.500	.571	

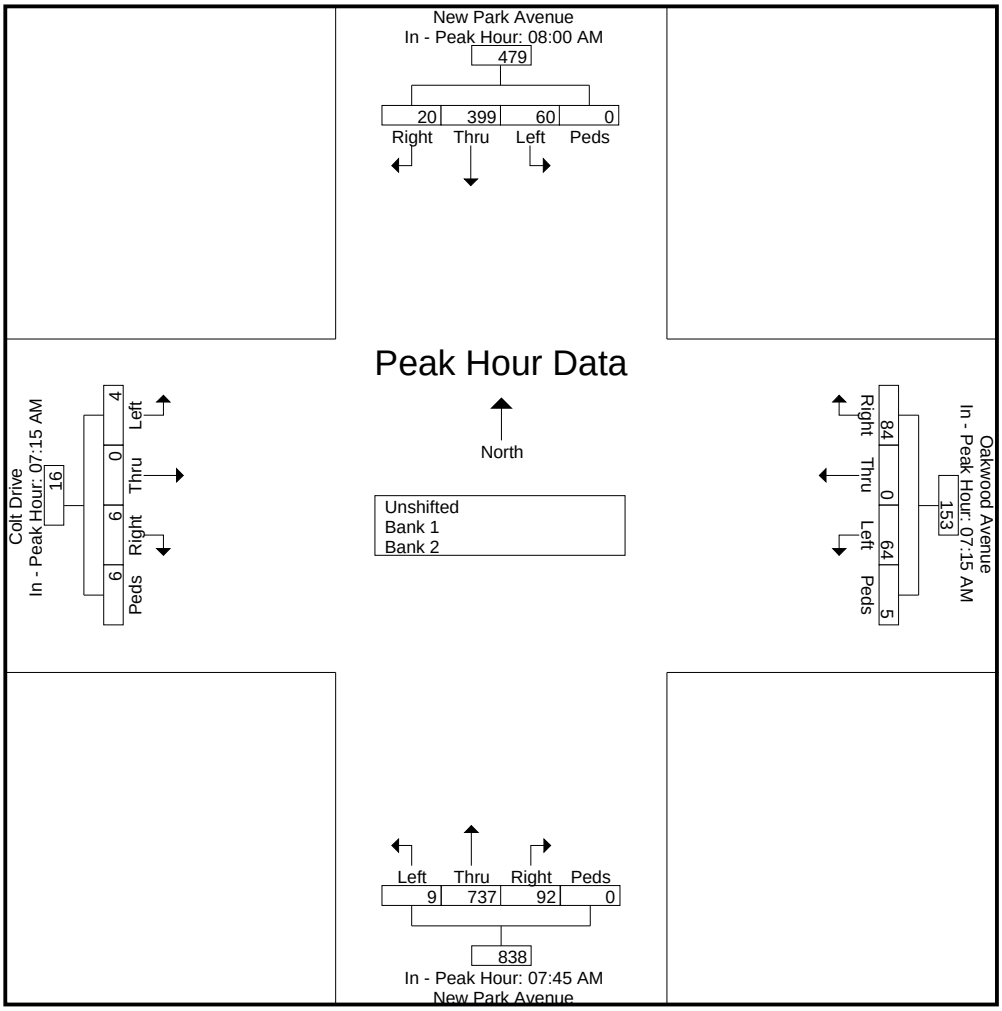

Connecticut Counts LLC

Kensington, Connecticut 06037
(860) 828-1693

NEw Park Ave at Oakwood Ave/Colt Drive
West Hartford, Connecticut

File Name : 14132
Site Code : 14132
Start Date : 3/31/2016
Page No : 1

Groups Printed- Unshifted - Bank 1 - Bank 2

	New Park Avenue From North					Oakwood Avenue From East					New Park Avenue From South					Colt Drive From West					
Start Time	Right	Thru	Left	Peds	App. Total	Right	Thru	Left	Peds	App. Total	Right	Thru	Left	Peds	App. Total	Right	Thru	Left	Peds	App. Total	Int. Total
04:00 PM	0	155	35	0	190	23	0	16	1	40	18	158	0	0	176	2	2	5	0	9	415
04:15 PM	0	178	38	0	216	20	0	15	0	35	22	131	1	0	154	1	4	8	2	15	420
04:30 PM	0	149	35	1	185	23	0	29	0	52	6	103	0	0	109	0	1	2	0	3	349
04:45 PM	0	168	30	0	198	22	0	26	1	49	17	179	0	0	196	0	0	4	0	4	447
Total	0	650	138	1	789	88	0	86	2	176	63	571	1	0	635	3	7	19	2	31	1631
05:00 PM	1	283	36	0	320	33	0	35	0	68	19	190	1	0	210	9	0	10	0	19	617
05:15 PM	1	192	34	1	228	19	1	23	0	43	16	145	1	1	163	3	2	7	0	12	446
05:30 PM	0	235	29	0	264	12	1	8	3	24	9	137	2	0	148	5	1	9	0	15	451
05:45 PM	1	174	21	0	196	23	0	9	1	33	12	149	1	0	162	7	0	2	0	9	400
Total	3	884	120	1	1008	87	2	75	4	168	56	621	5	1	683	24	3	28	0	55	1914
Grand Total	3	1534	258	2	1797	175	2	161	6	344	119	1192	6	1	1318	27	10	47	2	86	3545
Apprch %	0.2	85.4	14.4	0.1		50.9	0.6	46.8	1.7		9	90.4	0.5	0.1		31.4	11.6	54.7	2.3		
Total %	0.1	43.3	7.3	0.1	50.7	4.9	0.1	4.5	0.2	9.7	3.4	33.6	0.2	0	37.2	0.8	0.3	1.3	0.1	2.4	
Unshifted	3	1523										1181									
% Unshifted	100	99.3	96.9	100	98.9	95.4	100	95.7	100	95.6	95	99.1	100	100	98.7	100	100	97.9	100	98.8	98.5
Bank 1	0	7	3	0	10	4	0	1	0	5	1	6	0	0	7	0	0	1	0	1	23
% Bank 1	0	0.5	1.2	0	0.6	2.3	0	0.6	0	1.5	0.8	0.5	0	0	0.5	0	0	2.1	0	1.2	0.6
Bank 2	0	4	5	0	9	4	0	6	0	10	5	5	0	0	10	0	0	0	0	0	29
% Bank 2	0	0.3	1.9	0	0.5	2.3	0	3.7	0	2.9	4.2	0.4	0	0	0.8	0	0	0	0	0	0.8

Connecticut Counts LLC

Kensington, Connecticut 06037
(860) 828-1693

File Name : 14132
Site Code : 14132
Start Date : 3/31/2016
Page No : 2

	New Park Avenue From North					Oakwood Avenue From East					New Park Avenue From South					Colt Drive From West					
Start Time	Right	Thru	Left	Peds	App. Total	Right	Thru	Left	Peds	App. Total	Right	Thru	Left	Peds	App. Total	Right	Thru	Left	Peds	App. Total	Int. Total
Peak Hour Analysis From 04:00 PM to 05:45 PM - Peak 1 of 1																					
Peak Hour for Entire Intersection Begins at 04:45 PM																					
04:45 PM	0	168	30	0	198	22	0	26	1	49	17	179	0	0	196	0	0	4	0	4	447
05:00 PM	**1**	**283**	**36**	0	**320**	**33**	0	**35**	0	**68**	**19**	**190**	1	0	**210**	**9**	0	**10**	0	**19**	**617**
05:15 PM	1	192	34	**1**	228	19	**1**	23	0	43	16	145	1	**1**	163	3	**2**	7	0	12	446
05:30 PM	0	235	29	0	264	12	1	8	**3**	24	9	137	**2**	0	148	5	1	9	0	15	451
Total Volume	2	878	129	1	1010	86	2	92	4	184	61	651	4	1	717	17	3	30	0	50	1961
% App. Total	0.2	86.9	12.8	0.1		46.7	1.1	50	2.2		8.5	90.8	0.6	0.1		34	6	60	0		
PHF	.500	.776	.896	.250	.789	.652	.500	.657	.333	.676	.803	.857	.500	.250	.854	.472	.375	.750	.000	.658	.795

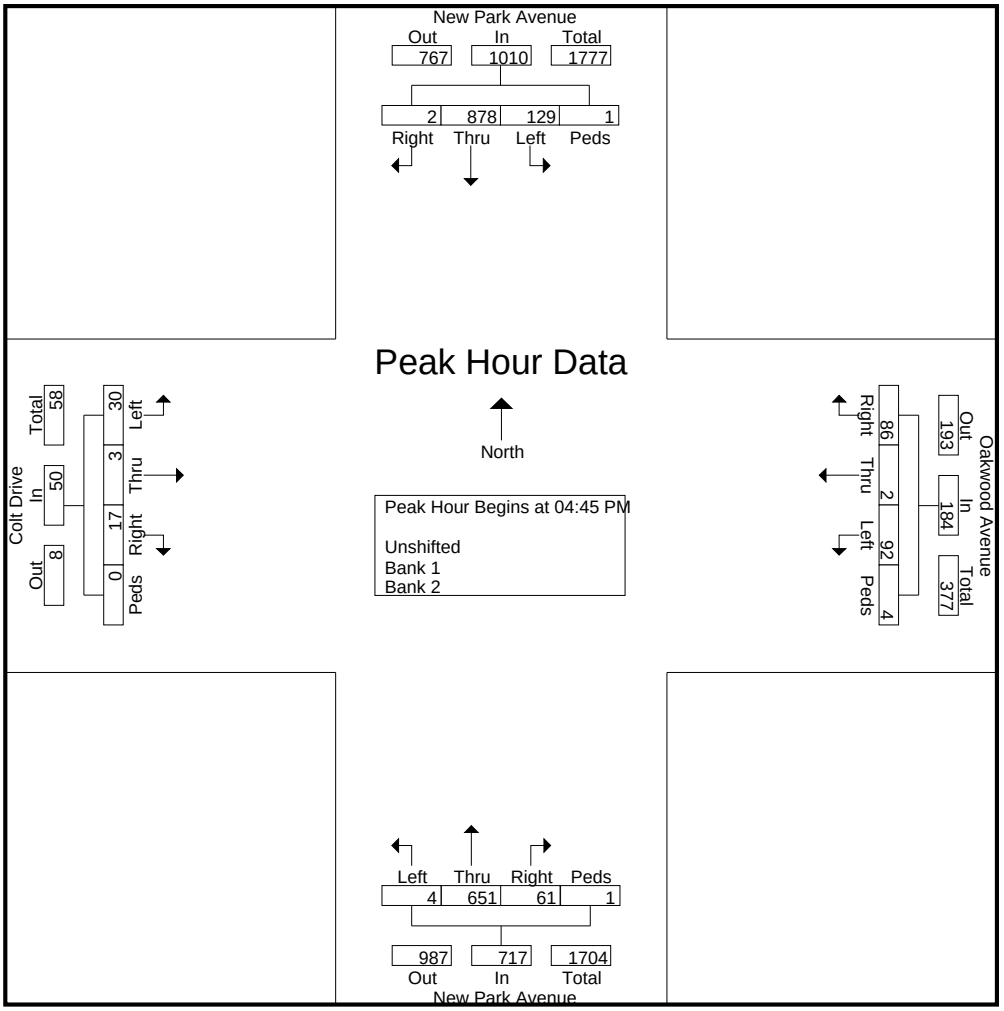

Connecticut Counts LLC

Kensington, Connecticut 06037
(860) 828-1693

File Name : 14132
Site Code : 14132
Start Date : 3/31/2016
Page No : 3

	New Park Avenue From North					Oakwood Avenue From East					New Park Avenue From South					Colt Drive From West					
Start Time	Right	Thru	Left	Peds	App. Total	Right	Thru	Left	Peds	App. Total	Right	Thru	Left	Peds	App. Total	Right	Thru	Left	Peds	App. Total	Int. Total

Peak Hour Analysis From 04:00 PM to 05:45 PM - Peak 1 of 1
Peak Hour for Each Approach Begins at:

	04:45 PM					04:30 PM					04:45 PM					05:00 PM				
+0 mins.	0	168	30	0	198	23	0	29	0	52	17	179	0	0	196	**9**	0	**10**	0	**19**
+15 mins.	**1**	**283**	**36**	0	**320**	22	0	26	**1**	49	**19**	**190**	1	0	**210**	3	**2**	7	0	12
+30 mins.	1	192	34	**1**	228	**33**	0	**35**	0	**68**	16	145	1	**1**	163	5	1	9	0	15
+45 mins.	0	235	29	0	264	19	**1**	23	0	43	9	137	**2**	0	148	7	0	2	0	9
Total Volume	2	878	129	1	1010	97	1	113	1	212	61	651	4	1	717	24	3	28	0	55
% App. Total	0.2	86.9	12.8	0.1		45.8	0.5	53.3	0.5		8.5	90.8	0.6	0.1		43.6	5.5	50.9	0	
PHF	.500	.776	.896	.250	.789	.735	.250	.807	.250	.779	.803	.857	.500	.250	.854	.667	.375	.700	.000	.724

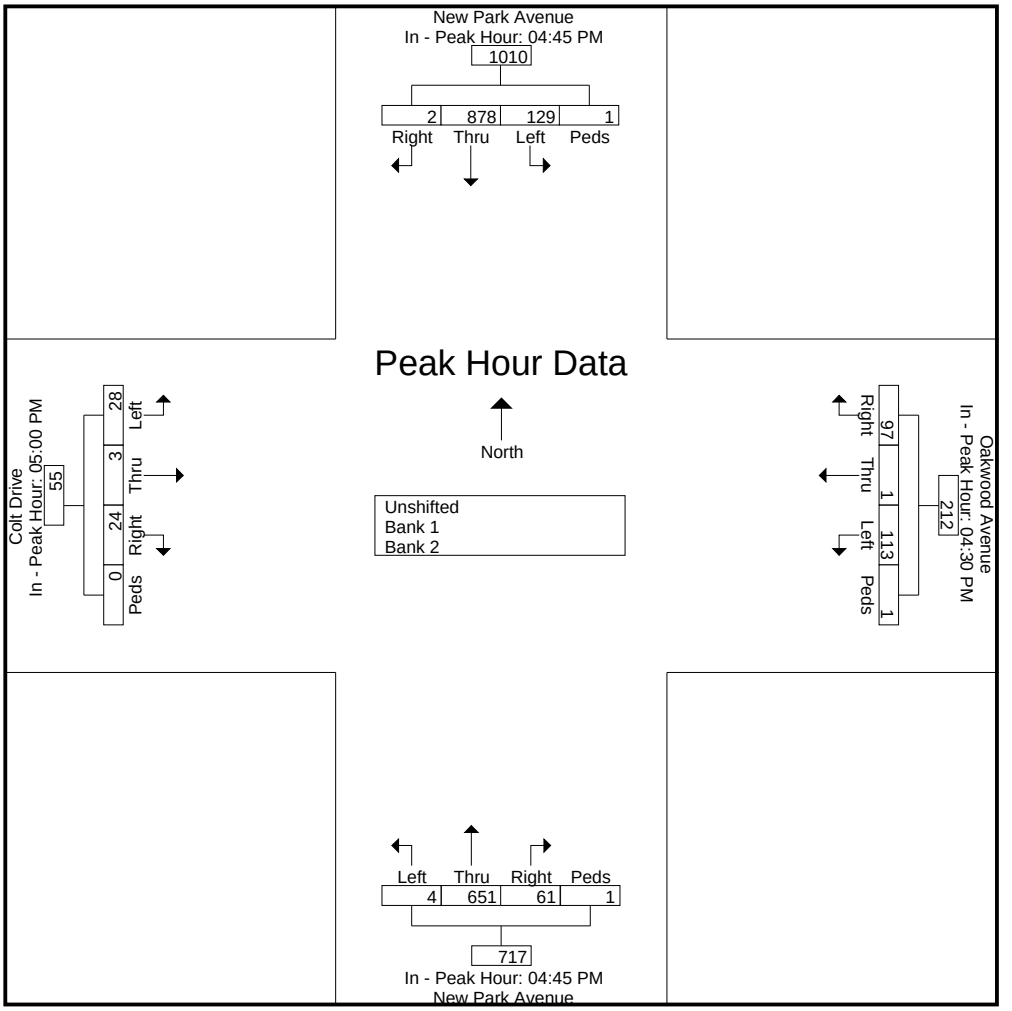

Connecticut Counts LLC

Kensington, Connecticut 06037
(860) 828-1693

New Park Ave at Oakwood Ave/Colt Drive
West Hartford, Connecticut

File Name : 14133
Site Code : 14133
Start Date : 4/2/2016
Page No : 1

Groups Printed- Unshifted - Bank 1 - Bank 2

	New Park Avenue From North					Oakwood Avenue From East					New Park Avenue From South					Colt Drive From West					
Start Time	Right	Thru	Left	Peds	App. Total	Right	Thru	Left	Peds	App. Total	Right	Thru	Left	Peds	App. Total	Right	Thru	Left	Peds	App. Total	Int. Total
11:00 AM	1	189	25	0	215	23	2	16	0	41	10	189	0	0	199	9	4	33	0	46	501
11:15 AM	0	175	22	0	197	18	0	16	0	34	15	152	0	0	167	3	1	3	0	7	405
11:30 AM	1	192	25	0	218	27	0	11	1	39	12	185	0	0	197	0	0	1	1	2	456
11:45 AM	4	183	23	0	210	19	3	13	0	35	6	189	0	0	195	0	2	4	3	9	449
Total	6	739	95	0	840	87	5	56	1	149	43	715	0	0	758	12	7	41	4	64	1811
12:00 PM	0	209	29	0	238	29	0	12	0	41	15	195	0	0	210	2	0	2	0	4	493
12:15 PM	0	198	42	0	240	22	0	8	0	30	10	176	0	0	186	0	0	0	0	0	456
12:30 PM	2	237	33	0	272	45	0	13	0	58	13	181	1	0	195	0	0	0	0	0	525
12:45 PM	1	203	35	0	239	25	0	15	0	40	10	161	0	0	171	0	0	1	0	1	451
Total	3	847	139	0	989	121	0	48	0	169	48	713	1	0	762	2	0	3	0	5	1925
Grand Total	9	1586	234	0	1829	208	5	104	1	318	91	1428	1	0	1520	14	7	44	4	69	3736
Apprch %	0.5	86.7	12.8	0		65.4	1.6	32.7	0.3		6	93.9	0.1	0		20.3	10.1	63.8	5.8		
Total %	0.2	42.5	6.3	0	49	5.6	0.1	2.8	0	8.5	2.4	38.2	0	0	40.7	0.4	0.2	1.2	0.1	1.8	
Unshifted	9	1582										1425									
% Unshifted	100	99.7	99.6	0	99.7	100	100	94.2	100	98.1	96.7	99.8	100	0	99.6	100	100	100	100	100	99.5
Bank 1	0	4	1	0	5	0	0	1	0	1	0	1	0	0	1	0	0	0	0	0	7
% Bank 1	0	0.3	0.4	0	0.3	0	0	1	0	0.3	0	0.1	0	0	0.1	0	0	0	0	0	0.2
Bank 2	0	0	0	0	0	0	0	5	0	5	3	2	0	0	5	0	0	0	0	0	10
% Bank 2	0	0	0	0	0	0	0	4.8	0	1.6	3.3	0.1	0	0	0.3	0	0	0	0	0	0.3

Connecticut Counts LLC

Kensington, Connecticut 06037
(860) 828-1693

File Name : 14133
Site Code : 14133
Start Date : 4/2/2016
Page No : 2

	New Park Avenue From North					Oakwood Avenue From East					New Park Avenue From South					Colt Drive From West					
Start Time	Right	Thru	Left	Peds	App. Total	Right	Thru	Left	Peds	App. Total	Right	Thru	Left	Peds	App. Total	Right	Thru	Left	Peds	App. Total	Int. Total
Peak Hour Analysis From 11:00 AM to 12:45 PM - Peak 1 of 1																					
Peak Hour for Entire Intersection Begins at 12:00 PM																					
12:00 PM	0	209	29	0	238	29	0	12	0	41	**15**	**195**	0	0	**210**	**2**	0	**2**	0	**4**	493
12:15 PM	0	198	**42**	0	240	22	0	8	0	30	10	176	0	0	186	0	0	0	0	0	456
12:30 PM	**2**	**237**	33	0	**272**	**45**	0	13	0	**58**	13	181	**1**	0	195	0	0	0	0	0	**525**
12:45 PM	1	203	35	0	239	25	0	**15**	0	40	10	161	0	0	171	0	0	1	0	1	451
Total Volume	3	847	139	0	989	121	0	48	0	169	48	713	1	0	762	2	0	3	0	5	1925
% App. Total	0.3	85.6	14.1	0		71.6	0	28.4	0		6.3	93.6	0.1	0		40	0	60	0		
PHF	.375	.893	.827	.000	.909	.672	.000	.800	.000	.728	.800	.914	.250	.000	.907	.250	.000	.375	.000	.313	.917

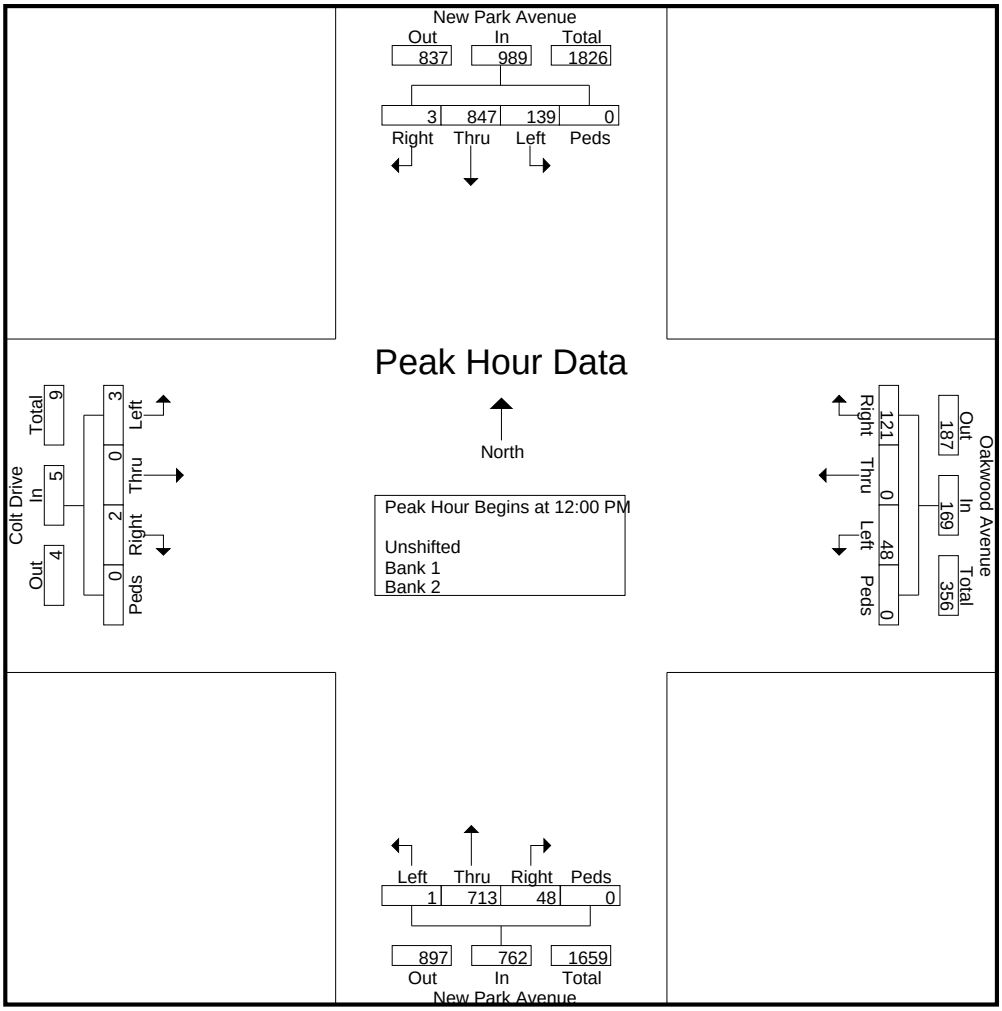

Connecticut Counts LLC

Kensington, Connecticut 06037
(860) 828-1693

File Name : 14133
Site Code : 14133
Start Date : 4/2/2016
Page No : 3

	New Park Avenue From North					Oakwood Avenue From East					New Park Avenue From South					Colt Drive From West					
Start Time	Right	Thru	Left	Peds	App. Total	Right	Thru	Left	Peds	App. Total	Right	Thru	Left	Peds	App. Total	Right	Thru	Left	Peds	App. Total	Int. Total

Peak Hour Analysis From 11:00 AM to 12:45 PM - Peak 1 of 1
Peak Hour for Each Approach Begins at:

	12:00 PM					12:00 PM					11:30 AM					11:00 AM				
+0 mins.	0	209	29	0	238	29	0	12	0	41	12	185	0	0	197	**9**	**4**	**33**	0	**46**
+15 mins.	0	198	**42**	0	240	22	0	8	0	30	6	189	0	0	195	3	1	3	0	7
+30 mins.	**2**	**237**	33	0	**272**	**45**	0	13	0	**58**	**15**	**195**	0	0	**210**	0	0	1	1	2
+45 mins.	1	203	35	0	239	25	0	**15**	0	40	10	176	0	0	186	0	2	4	**3**	9
Total Volume	3	847	139	0	989	121	0	48	0	169	43	745	0	0	788	12	7	41	4	64
% App. Total	0.3	85.6	14.1	0		71.6	0	28.4	0		5.5	94.5	0	0		18.8	10.9	64.1	6.2	
PHF	.375	.893	.827	.000	.909	.672	.000	.800	.000	.728	.717	.955	.000	.000	.938	.333	.438	.311	.333	.348

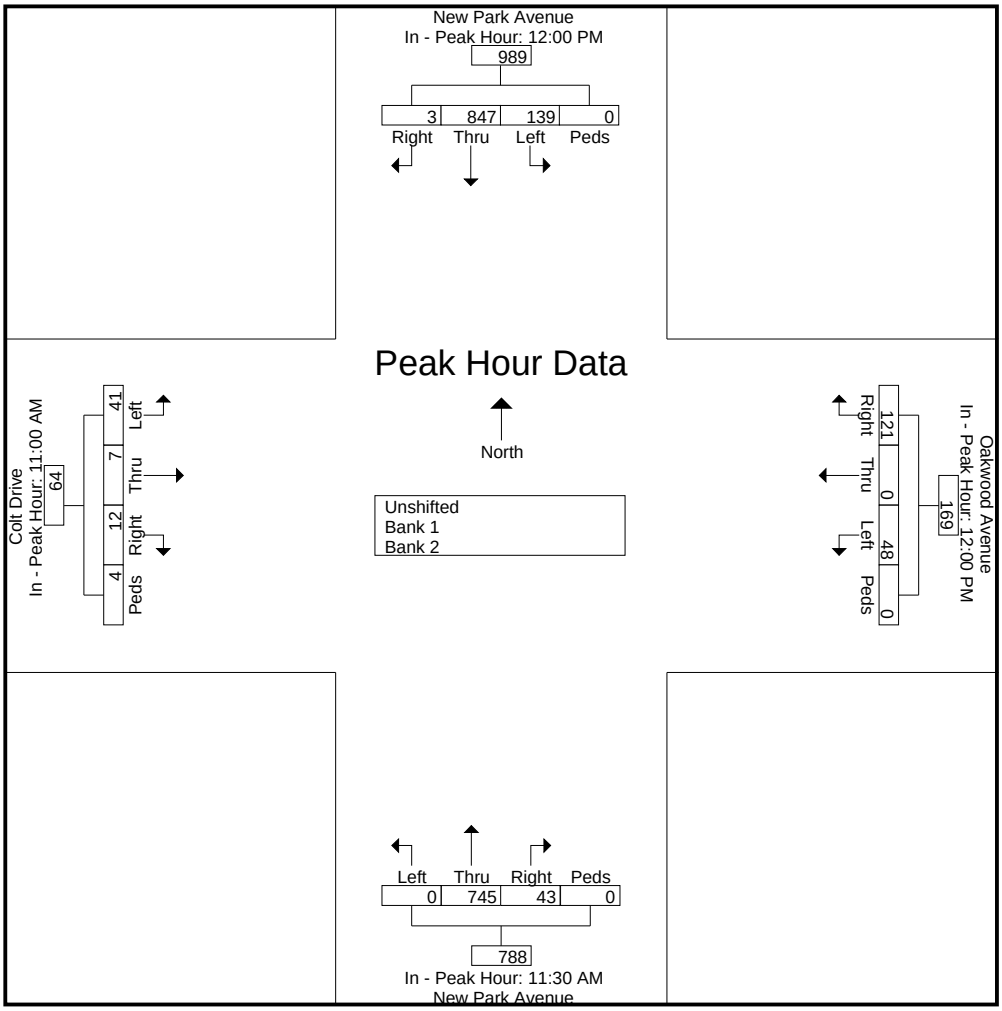

Connecticut Counts LLC

Kensington, Connecticut 06037
(860) 828-1693

New Park Avenue at Bj/ Home Depot Drive
West Hartford, Connecticut

File Name : 14122
Site Code : 14122
Start Date : 3/31/2016
Page No : 1

Groups Printed- Unshifted - Bank 1 - Bank 2

	New Park Avenue From North					Private Drive From East					New Park Avenue From South					Bj's/ Home Depot Dr From West					
Start Time	Right	Thru	Left	Peds	App. Total	Right	Thru	Left	Peds	App. Total	Right	Thru	Left	Peds	App. Total	Right	Thru	Left	Peds	App. Total	Int. Total
07:00 AM	27	82	0	0	109	0	0	0	1	1	0	86	14	0	100	12	0	20	0	32	242
07:15 AM	16	73	0	0	89	0	0	0	0	0	0	131	10	0	141	5	0	11	0	16	246
07:30 AM	25	74	3	0	102	0	1	0	1	2	2	161	6	0	169	11	0	22	1	34	307
07:45 AM	26	90	0	0	116	0	0	0	0	0	1	177	23	0	201	7	1	16	1	25	342
Total	94	319	3	0	416	0	1	0	2	3	3	555	53	0	611	35	1	69	2	107	1137
08:00 AM	42	104	1	1	148	1	0	1	1	3	0	174	25	0	199	16	2	33	2	53	403
08:15 AM	40	98	1	0	139	0	0	0	0	0	0	167	21	0	188	25	0	21	1	47	374
08:30 AM	51	87	1	0	139	2	0	0	1	3	1	170	32	0	203	22	0	44	1	67	412
08:45 AM	39	98	1	0	138	0	1	1	0	2	3	140	37	0	180	17	1	46	0	64	384
Total	172	387	4	1	564	3	1	2	2	8	4	651	115	0	770	80	3	144	4	231	1573
Grand Total	266	706	7	1	980	3	2	2	4	11	7	1206	168	0	1381	115	4	213	6	338	2710
Apprch %	27.1	72	0.7	0.1		27.3	18.2	18.2	36.4		0.5	87.3	12.2	0		34	1.2	63	1.8		
Total %	9.8	26.1	0.3	0	36.2	0.1	0.1	0.1	0.1	0.4	0.3	44.5	6.2	0	51	4.2	0.1	7.9	0.2	12.5	
Unshifted	253	685	7	1	946	3	2	2	4	11	7	1169									
% Unshifted	95.1	97	100	100	96.5	100	100	100	100	100	100	96.9	95.8	0	96.8	96.5	100	94.4	100	95.3	96.5
Bank 1	4	13	0	0	17	0	0	0	0	0	0	18	3	0	21	0	0	4	0	4	42
% Bank 1	1.5	1.8	0	0	1.7	0	0	0	0	0	0	1.5	1.8	0	1.5	0	0	1.9	0	1.2	1.5
Bank 2	9	8	0	0	17	0	0	0	0	0	0	19	4	0	23	4	0	8	0	12	52
% Bank 2	3.4	1.1	0	0	1.7	0	0	0	0	0	0	1.6	2.4	0	1.7	3.5	0	3.8	0	3.6	1.9

Connecticut Counts LLC

Kensington, Connecticut 06037
(860) 828-1693

File Name : 14122
Site Code : 14122
Start Date : 3/31/2016
Page No : 2

	New Park Avenue From North					Private Drive From East					New Park Avenue From South					Bj's/ Home Depot Dr From West					
Start Time	Right	Thru	Left	Peds	App. Total	Right	Thru	Left	Peds	App. Total	Right	Thru	Left	Peds	App. Total	Right	Thru	Left	Peds	App. Total	Int. Total
Peak Hour Analysis From 07:00 AM to 08:45 AM - Peak 1 of 1																					
Peak Hour for Entire Intersection Begins at 08:00 AM																					
08:00 AM	42	**104**	**1**	**1**	**148**	1	0	**1**	**1**	**3**	0	**174**	25	0	199	16	**2**	33	**2**	53	403
08:15 AM	40	98	1	0	139	0	0	0	0	0	0	167	21	0	188	**25**	0	21	1	47	374
08:30 AM	**51**	87	1	0	139	**2**	0	0	1	3	1	170	32	0	**203**	22	0	44	1	**67**	**412**
08:45 AM	39	98	1	0	138	0	**1**	1	0	2	**3**	140	**37**	0	180	17	1	**46**	0	64	384
Total Volume	172	387	4	1	564	3	1	2	2	8	4	651	115	0	770	80	3	144	4	231	1573
% App. Total	30.5	68.6	0.7	0.2		37.5	12.5	25	25		0.5	84.5	14.9	0		34.6	1.3	62.3	1.7		
PHF	.843	.930	1.00	.250	.953	.375	.250	.500	.500	.667	.333	.935	.777	.000	.948	.800	.375	.783	.500	.862	.954

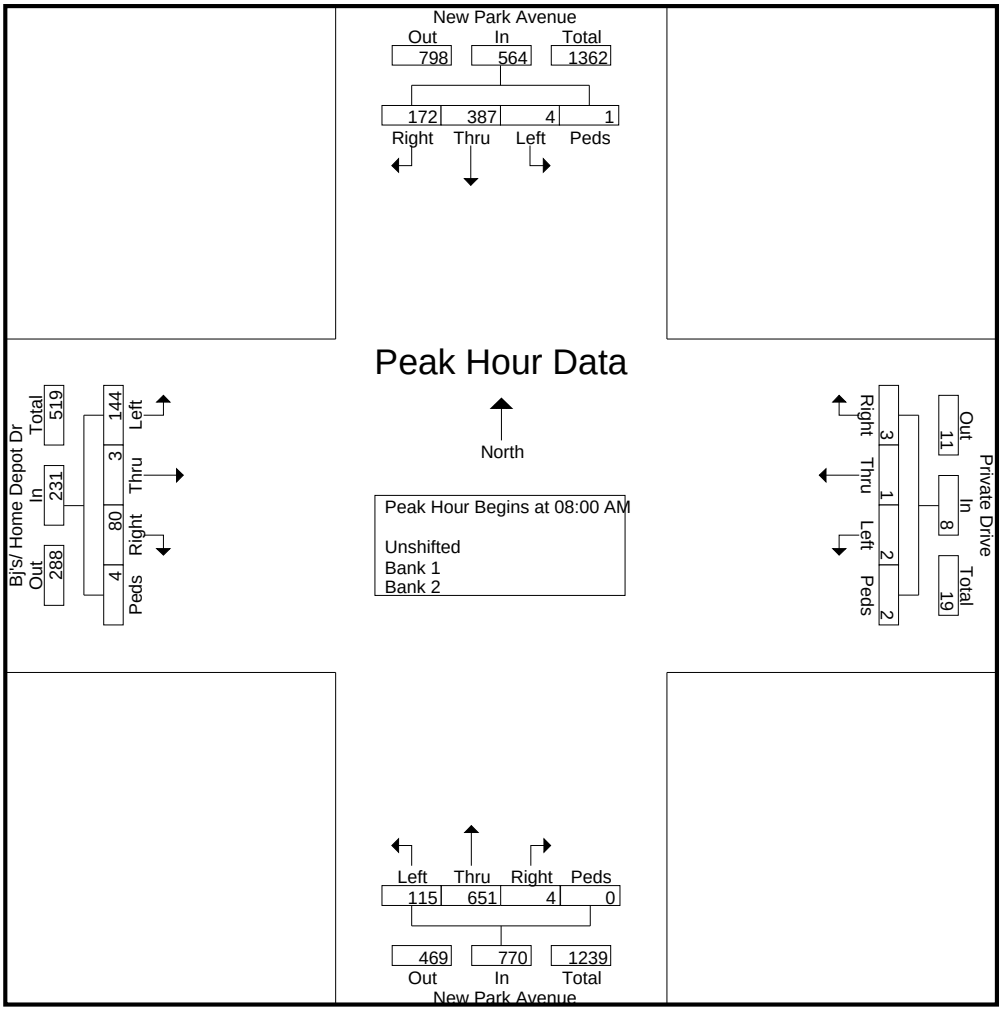

Connecticut Counts LLC

Kensington, Connecticut 06037
(860) 828-1693

File Name : 14122
Site Code : 14122
Start Date : 3/31/2016
Page No : 3

	New Park Avenue From North					Private Drive From East					New Park Avenue From South					Bj's/ Home Depot Dr From West					
Start Time	Right	Thru	Left	Peds	App. Total	Right	Thru	Left	Peds	App. Total	Right	Thru	Left	Peds	App. Total	Right	Thru	Left	Peds	App. Total	Int. Total
Peak Hour Analysis From 07:00 AM to 08:45 AM - Peak 1 of 1																					
Peak Hour for Each Approach Begins at:																					
	08:00 AM					08:00 AM					07:45 AM					08:00 AM					
+0 mins.	42	**104**	**1**	**1**	**148**	1	0	**1**	**1**	**3**	**1**	**177**	23	0	201	16	**2**	33	**2**	53	
+15 mins.	40	98	1	0	139	0	0	0	0	0	0	174	25	0	199	**25**	0	21	1	47	
+30 mins.	**51**	87	1	0	139	**2**	0	0	1	3	0	167	21	0	188	22	0	44	1	**67**	
+45 mins.	39	98	1	0	138	0	**1**	1	0	2	1	170	**32**	0	**203**	17	1	**46**	0	64	
Total Volume	172	387	4	1	564	3	1	2	2	8	2	688	101	0	791	80	3	144	4	231	
% App. Total	30.5	68.6	0.7	0.2		37.5	12.5	25	25		0.3	87	12.8	0		34.6	1.3	62.3	1.7		
PHF	.843	.930	1.000	.250	.953	.375	.250	.500	.500	.667	.500	.972	.789	.000	.974	.800	.375	.783	.500	.862	

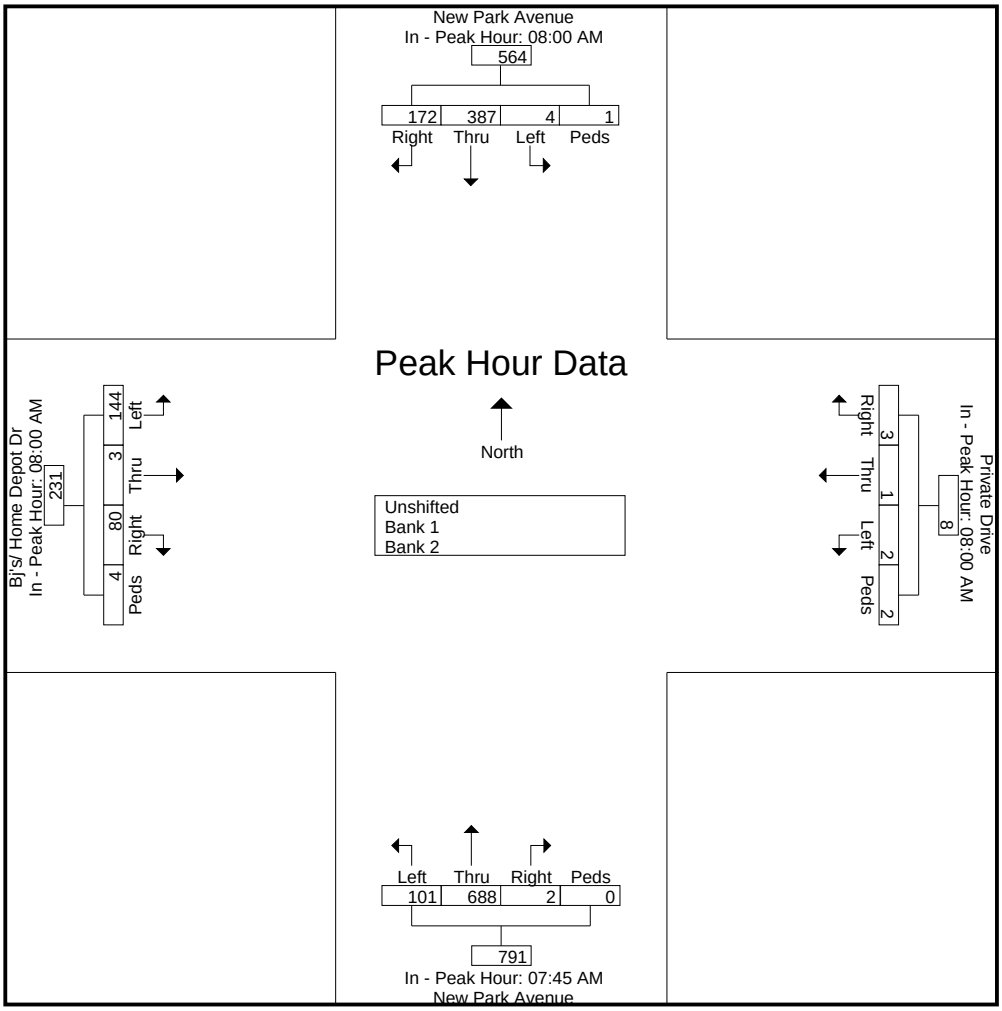

New Park Ave. at West Hartford Place/Driveway

P.M. TRAFFIC COUNTS 4:00 to 6:00
West Hartford, CT
prepared by Reliable Traffic Counts, LLC
Weather Cldy.75 degrees

ALL VEHICLES
PEAK HOUR
4:00 TO 5:00 P.M.

File Name : 908-1f
Site Code : 00000001
Start Date : 6/26/2015
Page No : 1

Groups Printed- CARS - HEAVY VEHICLES - BICYCLES

	NEW PARK AVE. Southbound					DRIVEWAY Westbound					NEW PARK AVE. Northbound					WEST HARTFORD PLACE Eastbound					
Start Time	Right	Thru	Left	Peds	App. Total	Right	Thru	Left	Peds	App. Total	Right	Thru	Left	Peds	App. Total	Right	Thru	Left	Peds	App. Total	Int. Total
04:00 PM	73	155	2	0	230	2	1	4	0	7	2	119	42	1	164	58	1	69	3	131	532
04:15 PM	73	155	0	0	228	3	1	2	2	8	4	133	39	0	176	65	1	62	0	128	540
04:30 PM	63	171	2	0	236	0	1	1	0	2	2	132	53	0	187	44	3	63	0	110	535
04:45 PM	84	152	0	0	236	0	1	4	0	5	2	133	38	0	173	54	3	69	0	126	540
Total	293	633	4	0	930	5	4	11	2	22	10	517	172	1	700	221	8	263	3	495	2147
05:00 PM	73	143	1	1	218	0	1	0	0	1	2	156	32	1	191	51	1	59	3	114	524
05:15 PM	69	145	0	0	214	1	1	0	0	2	2	116	45	0	163	48	2	72	0	122	501
05:30 PM	70	137	0	0	207	2	2	3	0	7	10	132	39	0	181	55	0	62	0	117	512
05:45 PM	70	135	0	2	207	2	1	1	0	4	2	118	36	0	156	58	1	64	0	123	490
Total	282	560	1	3	846	5	5	4	0	14	16	522	152	1	691	212	4	257	3	476	2027
Grand Total	575	1193	5	3	1776	10	9	15	2	36	26	1039	324	2	1391	433	12	520	6	971	4174
Apprch %	32.4	67.2	0.3	0.2		27.8	25	41.7	5.6		1.9	74.7	23.3	0.1		44.6	1.2	53.6	0.6		
Total %	13.8	28.6	0.1	0.1	42.5	0.2	0.2	0.4	0	0.9	0.6	24.9	7.8	0	33.3	10.4	0.3	12.5	0.1	23.3	
CARS	562	1185	5	3	1755	10	9	15	2	36	26	1032	321	2	1381	425	12	513	6	956	4128
% CARS	97.7	99.3	100	100	98.8	100	100	100	100	100	100	99.3	99.1	100	99.3	98.2	100	98.7	100	98.5	98.9
HEAVY VEHICLES	13	3	0	0	16	0	0	0	0	0	0	6	3	0	9	8	0	7	0	15	40
% HEAVY VEHICLES	2.3	0.3	0	0	0.9	0	0	0	0	0	0	0.6	0.9	0	0.6	1.8	0	1.3	0	1.5	1
BICYCLES	0	5	0	0	5	0	0	0	0	0	0	1	0	0	1	0	0	0	0	0	6
% BICYCLES	0	0.4	0	0	0.3	0	0	0	0	0	0	0.1	0	0	0.1	0	0	0	0	0	0.1

New Park Ave. at West Hartford Place/Driveway

P.M. TRAFFIC COUNTS 4:00 to 6:00
West Hartford, CT
prepared by Reliable Traffic Counts, LLC
Weather Cldy.75 degrees

ALL VEHICLES
PEAK HOUR
4:00 TO 5:00 P.M.

File Name : 908-1f
Site Code : 00000001
Start Date : 6/26/2015
Page No : 2

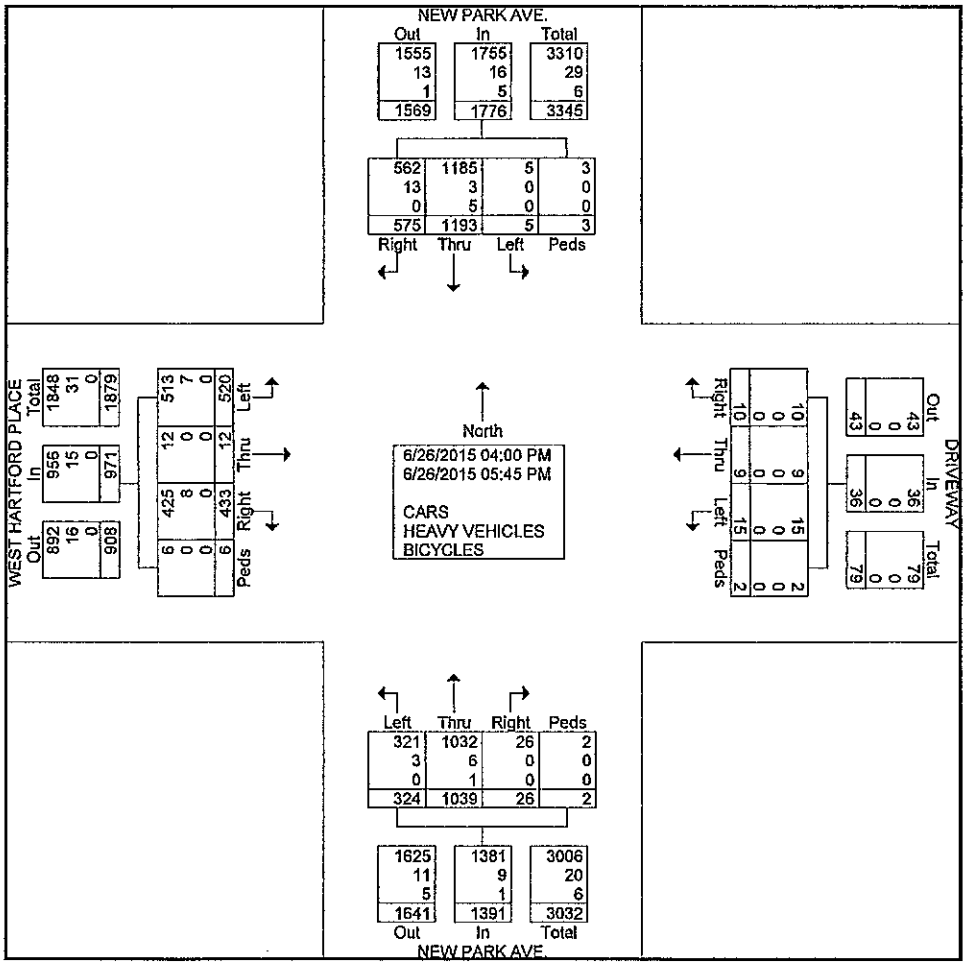

New Park Ave. at West Hartford Place/Driveway

P.M. TRAFFIC COUNTS 4:00 to 6:00
West Hartford, CT
prepared by Reliable Traffic Counts, LLC
Weather Cldy.75 degrees

ALL VEHICLES
PEAK HOUR
4:00 TO 5:00 P.M.

File Name : 908-1f
Site Code : 00000001
Start Date : 6/26/2015
Page No : 3

	NEW PARK AVE. Southbound					DRIVEWAY Westbound					NEW PARK AVE. Northbound					WEST HARTFORD PLACE Eastbound					
Start Time	Right	Thru	Left	Peds	App. Total	Right	Thru	Left	Peds	App. Total	Right	Thru	Left	Peds	App. Total	Right	Thru	Left	Peds	App. Total	Int. Total
Peak Hour Analysis From 04:00 PM to 04:45 PM - Peak 1 of 1																					
Peak Hour for Entire Intersection Begins at 04:00 PM																					
04:00 PM	73	155	2	0	230	2	1	4	0	7	2	119	42	1	164	58	1	69	3	131	532
04:15 PM	73	155	0	0	228	3	1	2	2	8	4	133	39	0	176	65	1	62	0	128	540
04:30 PM	63	171	2	0	236	0	1	1	0	2	2	132	53	0	187	44	3	63	0	110	535
04:45 PM	84	152	0	0	236	0	1	4	0	5	2	133	38	0	173	54	3	69	0	126	540
Total Volume	293	633	4	0	930	5	4	11	2	22	10	517	172	1	700	221	8	263	3	495	2147
% App. Total	31.5	68.1	0.4	0		22.7	18.2	50	9.1		1.4	73.9	24.6	0.1		44.6	1.6	53.1	0.6		
PHF	.872	.925	.500	.000	.985	.417	1.000														

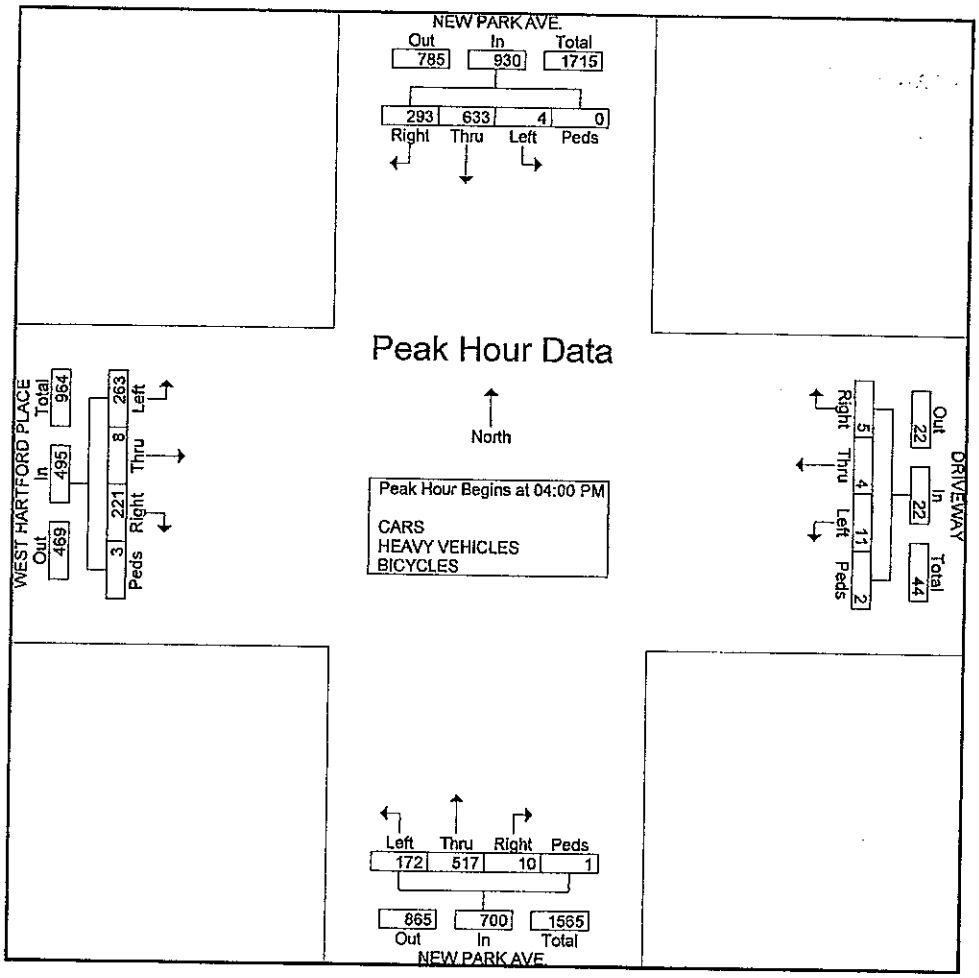

New Park Ave. at West Hartford Place/Driveway

Saturday Mid-Day TRAFFIC COUNTS 11:00 to 2:00
West Haven, CT
prepared by Reliable Traffic Counts, LLC
Weather Clear 80 degrees

ALL VEHICLES
PEAK HOUR
11:00 TO 12:00 NOON

File Name : 908-1S
Site Code : 00000001
Start Date : 6/13/2015
Page No : 1

Groups Printed- CARS - HEAVY VEHICLES - BICYCLES

	Southbound					Westbound					Northbound					Eastbound					
Start Time	Right	Thru	Left	Peds	App. Total	Right	Thru	Left	Peds	App. Total	Right	Thru	Left	Peds	App. Total	Right	Thru	Left	Peds	App. Total	Int. Total
11:00 AM	94	98	6	0	198	1	1	3	0	5	4	167	72	0	243	79	4	85	1	169	615
11:15 AM	118	107	4	1	230	4	1	3	1	9	7	114	74	2	197	73	0	83	1	157	593
11:30 AM	77	122	0	0	199	0	1	3	0	4	3	113	73	0	189	93	2	96	2	193	585
11:45 AM	107	121	1	0	229	1	0	1	0	2	5	139	70	0	214	88	1	83	0	172	617
Total	396	448	11	1	856	6	3	10	1	20	19	533	289	2	843	333	7	347	4	691	2410
12:00 PM	93	117	0	1	211	0	1	1	2	4	7	129	75	0	211	78	6	89	0	173	599
12:15 PM	127	116	2	0	245	0	3	4	0	7	12	108	63	1	184	75	5	84	1	165	601
12:30 PM	94	127	2	4	227	3	1	1	0	5	3	117	65	1	186	68	6	114	0	188	606
12:45 PM	102	107	1	2	212	4	5	2	1	12	4	101	71	0	176	91	4	95	3	193	593
Total	416	467	5	7	895	7	10	8	3	28	26	455	274	2	757	312	21	382	4	719	2399
01:00 PM	122	123	1	0	246	1	2	6	0	9	1	112	52	1	166	80	6	95	1	182	603
01:15 PM	119	101	0	1	221	0	0	1	2	3	11	102	49	0	162	54	3	104	0	161	547
01:30 PM	95	111	1	0	207	3	1	5	0	9	2	123	53	0	178	90	1	95	1	187	581
01:45 PM	89	118	2	1	210	1	3	2	1	7	3	110	59	0	172	70	3	80	0	153	542
Total	425	453	4	2	884	5	6	14	3	28	17	447	213	1	678	294	13	374	2	683	2273
Grand Total	1237	1368	20	10	2635	18	19	32	7	76	62	1435	776	5	2278	939	41	1103	10	2093	7082
Apprch %	46.9	51.9	0.8	0.4		23.7	25	42.1	9.2		2.7	63	34.1	0.2		44.9	2	52.7	0.5		
Total %	17.5	19.3	0.3	0.1	37.2	0.3	0.3	0.5	0.1	1.1	0.9	20.3	11	0.1	32.2	13.3	0.6	15.6	0.1	29.6	
CARS	1227	1360	20	10	2617	18	19	32	7	76	62	1426	773	5	2266	934	41	1092	10	2077	7036
% CARS	99.2	99.4	100	100	99.3	100	100	100	100	100	100	99.4	99.6	100	99.5	99.5	100	99	100	99.2	99.4
HEAVY VEHICLES	10	3	0	0	13	0	0	0	0	0	0	2	3	0	5	4	0	11	0	15	33
% HEAVY VEHICLES	0.8	0.2	0	0	0.5	0	0	0	0	0	0	0.1	0.4	0	0.2	0.4	0	1	0	0.7	0.5
BICYCLES	0	5	0	0	5	0	0	0	0	0	0	7	0	0	7	1	0	0	0	1	13
% BICYCLES	0	0.4	0	0	0.2	0	0	0	0	0	0	0.5	0	0	0.3	0.1	0	0	0	0	0.2

New Park Ave. at West Hartford Place/Driveway

Saturday Mid-Day TRAFFIC COUNTS 11:00 to 2:00
West Haven, CT
prepared by Reliable Traffic Counts, LLC
Weather Clear 80 degrees

ALL VEHICLES
PEAK HOUR
11:00 TO 12:00 NOON

File Name : 908-1S
Site Code : 00000001
Start Date : 6/13/2015
Page No : 2

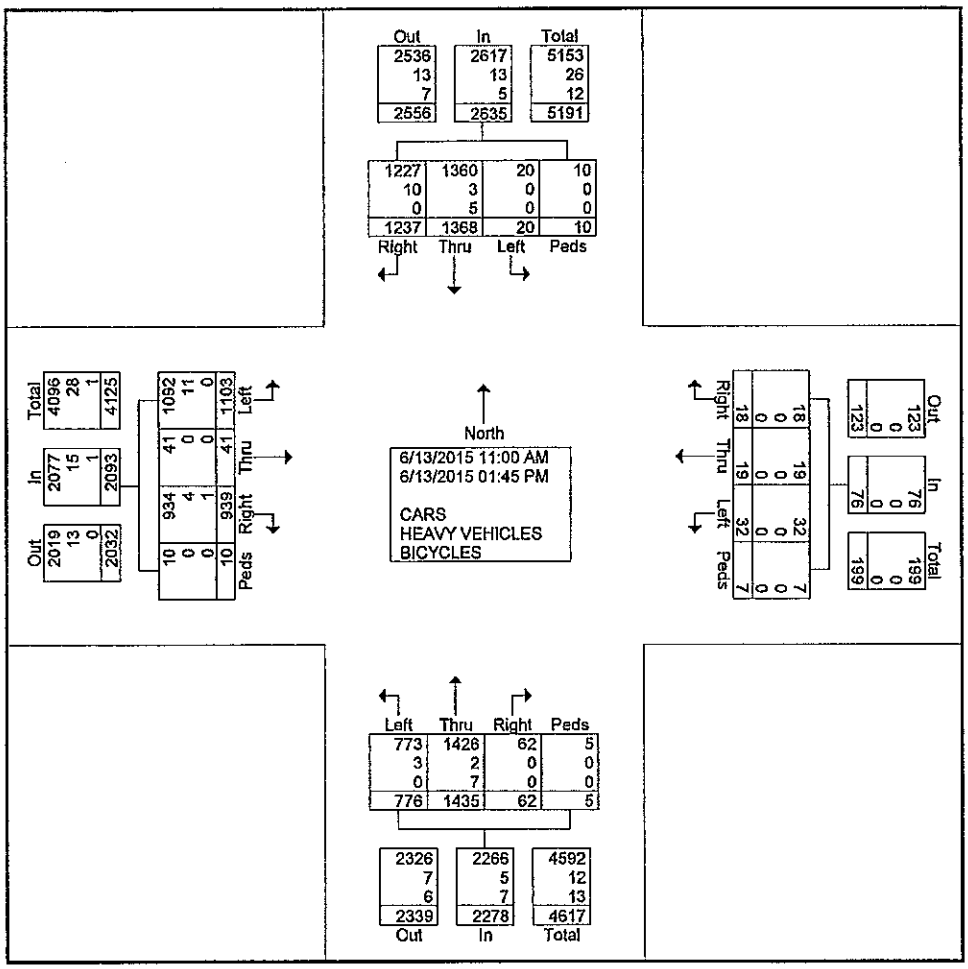

New Park Ave. at West Hartford Place/Driveway

Saturday Mid-Day TRAFFIC COUNTS 11:00 to 2:00
West Haven, CT
prepared by Reliable Traffic Counts, LLC
Weather Clear 80 degrees

ALL VEHICLES
PEAK HOUR
11:00 TO 12:00 NOON

File Name : 908-1S
Site Code : 00000001
Start Date : 6/13/2015
Page No : 3

	Southbound					Westbound					Northbound					Eastbound					
Start Time	Right	Thru	Left	Peds	App. Total	Right	Thru	Left	Peds	App. Total	Right	Thru	Left	Peds	App. Total	Right	Thru	Left	Peds	App. Total	Int. Total
Peak Hour Analysis From 11:00 AM to 11:45 AM - Peak 1 of 1																					
Peak Hour for Entire Intersection Begins at 11:00 AM																					
11:00 AM	94	98	6	0	198	1	1	3	0	5	4	167	72	0	243	79	4	85	1	169	615
11:15 AM	118	107	4	1	230	4	1	3	1	9	7	114	74	2	197	73	0	83	1	157	593
11:30 AM	77	122	0	0	199	0	1	3	0	4	3	113	73	0	189	93	2	96	2	193	585
11:45 AM	107	121	1	0	229	1	0	1	0	2	5	139	70	0	214	88	1	83	0	172	617
Total Volume	396	448	11	1	856	6	3	10	1	20	19	533	289	2	843	333	7	347	4	691	2410
% App. Total	46.3	52.3	1.3	0.1		30	15	50	5		2.3	63.2	34.3	0.2		48.2	1	50.2	0.6		
PHF	.839	.918	.458	.250	.930	.375	.750	.833	.250	.556	.679	.798	.976	.250	.867	.895	.438	.904	.500	.895	.976

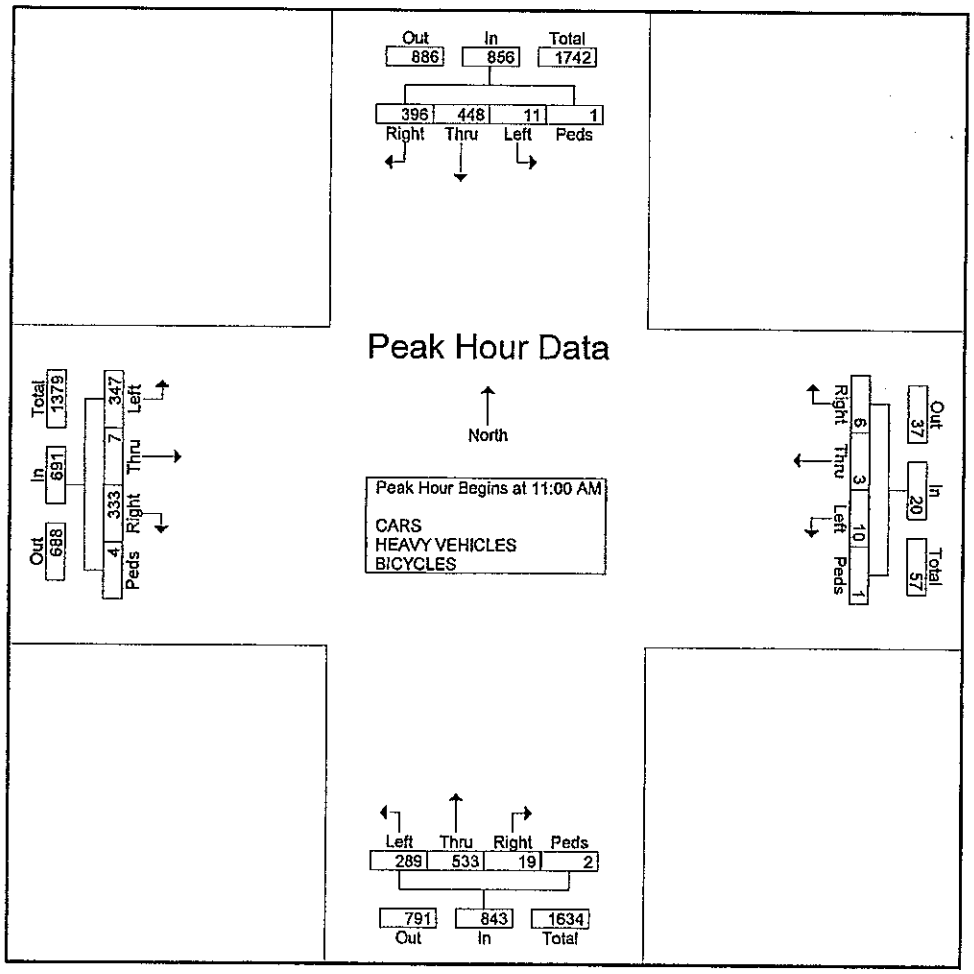

Connecticut Counts LLC

Kensington, Connecticut 06037
(860) 828-1693

New Park Avenue at Flatbush Avenue
West Hartford, Conecticut

File Name : 14134
Site Code : 14134
Start Date : 3/31/2016
Page No : 1

Groups Printed- Lights - Buses - Trucks - Bicycles on Crosswalk - Pedestrians

	New Park Avenue From North					Flatbush Avenue From East					New Park Avenue From South					Flatbush Avenue From West					
Start Time	Right	Thru	Left	Peds	App. Total	Right	Thru	Left	Peds	App. Total	Right	Thru	Left	Peds	App. Total	Right	Thru	Left	Peds	App. Total	Int. Total
07:00 AM	6	49	49	0	104	52	45	46	4	147	26	66	12	1	105	14	22	5	1	42	398
07:15 AM	5	37	52	1	95	65	30	44	3	142	39	97	16	3	155	12	45	3	0	60	452
07:30 AM	5	44	58	0	107	76	30	37	8	151	54	86	21	1	162	22	47	7	1	77	497
07:45 AM	1	72	63	0	136	68	33	38	3	142	63	118	21	0	202	19	63	8	0	90	570
Total	17	202	222	1	442	261	138	165	18	582	182	367	70	5	624	67	177	23	2	269	1917
08:00 AM	6	68	48	0	122	84	32	57	3	176	70	108	21	0	199	29	55	10	0	94	591
08:15 AM	8	71	59	0	138	72	37	52	2	163	60	80	28	2	170	42	63	5	3	113	584
08:30 AM	4	73	60	0	137	65	40	51	2	158	69	108	19	1	197	24	87	5	1	117	609
08:45 AM	3	61	49	0	113	71	30	52	1	154	58	98	25	2	183	28	60	6	0	94	544
Total	21	273	216	0	510	292	139	212	8	651	257	394	93	5	749	123	265	26	4	418	2328
Grand Total	38	475	438	1	952	553	277	377	26	1233	439	761	163	10	1373	190	442	49	6	687	4245
Apprch %	4	49.9	46	0.1		44.8	22.5	30.6	2.1		32	55.4	11.9	0.7		27.7	64.3	7.1	0.9		
Total %	0.9	11.2	10.3	0	22.4	13	6.5	8.9	0.6	29	10.3	17.9	3.8	0.2	32.3	4.5	10.4	1.2	0.1	16.2	
Lights	35	444	400	0	879	523	250	349	0	1122	414	719	145	0	1278	187	376	47	0	610	3889
% Lights	92.1	93.5	91.3	0	92.3	94.6	90.3	92.6	0	91	94.3	94.5	89	0	93.1	98.4	85.1	95.9	0	88.8	91.6
Buses	1	9	28	0	38	19	21	8	0	48	6	12	9	0	27	1	62	1	0	64	177
% Buses	2.6	1.9	6.4	0	4	3.4	7.6	2.1	0	3.9	1.4	1.6	5.5	0	2	0.5	14	2	0	9.3	4.2
Trucks	2	22	10	0	34	11	6	20	0	37	19	30	9	0	58	2	4	1	0	7	136
% Trucks	5.3	4.6	2.3	0	3.6	2	2.2	5.3	0	3	4.3	3.9	5.5	0	4.2	1.1	0.9	2	0	1	3.2
Bicycles on Crosswalk																					
% Bicycles on Crosswalk	0	0	0	0	0	0	0	0	3.8	0.1	0	0	0	0	0	0	0	0	0	0	0
Pedestrians	0	0	0	1	1	0	0	0	25	25	0	0	0	10	10	0	0	0	6	6	42
% Pedestrians	0	0	0	100	0.1	0	0	0	96.2	2	0	0	0	100	0.7	0	0	0	100	0.9	1

Connecticut Counts LLC

Kensington, Connecticut 06037
(860) 828-1693

File Name : 14134
Site Code : 14134
Start Date : 3/31/2016
Page No : 2

	New Park Avenue From North					Flatbush Avenue From East					New Park Avenue From South					Flatbush Avenue From West					
Start Time	Right	Thru	Left	Peds	App. Total	Right	Thru	Left	Peds	App. Total	Right	Thru	Left	Peds	App. Total	Right	Thru	Left	Peds	App. Total	Int. Total
Peak Hour Analysis From 07:00 AM to 08:45 AM - Peak 1 of 1																					
Peak Hour for Entire Intersection Begins at 07:45 AM																					
07:45 AM	1	72	**63**	0	136	68	33	38	**3**	142	63	**118**	21	0	**202**	19	63	8	0	90	570
08:00 AM	6	68	48	0	122	**84**	32	**57**	3	**176**	**70**	108	21	0	199	29	55	**10**	0	94	591
08:15 AM	**8**	71	59	0	**138**	72	37	52	2	163	60	80	**28**	**2**	170	**42**	63	5	**3**	113	584
08:30 AM	4	**73**	60	0	137	65	**40**	51	2	158	69	108	19	1	197	24	**87**	5	1	**117**	**609**
Total Volume	19	284	230	0	533	289	142	198	10	639	262	414	89	3	768	114	268	28	4	414	2354
% App. Total	3.6	53.3	43.2	0		45.2	22.2	31	1.6		34.1	53.9	11.6	0.4		27.5	64.7	6.8	1		
PHF	.594	.973	.913	.000	.966	.860	.888	.868	.833	.908	.936	.877	.795	.375	.950	.679	.770	.700	.333	.885	.966

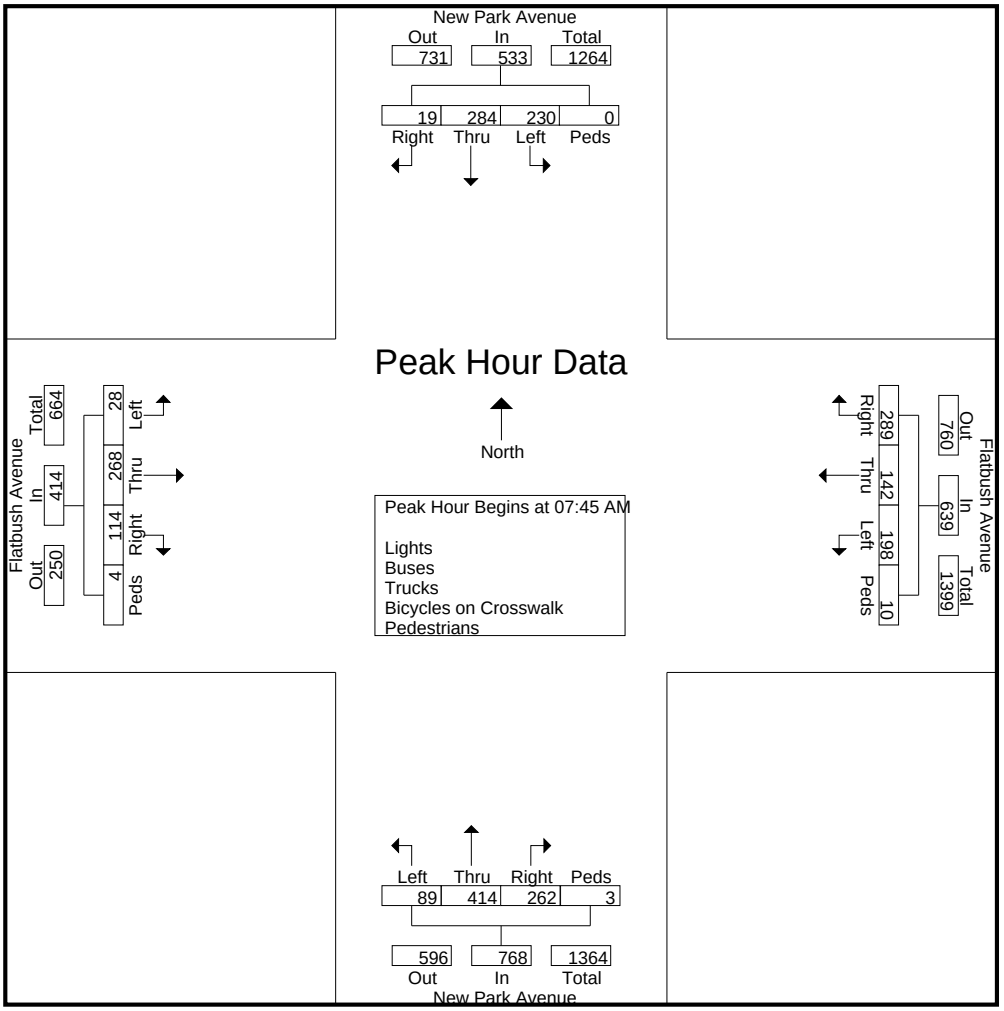

Connecticut Counts LLC

Kensington, Connecticut 06037
(860) 828-1693

File Name : 14134
Site Code : 14134
Start Date : 3/31/2016
Page No : 3

	New Park Avenue From North					Flatbush Avenue From East					New Park Avenue From South					Flatbush Avenue From West					
Start Time	Right	Thru	Left	Peds	App. Total	Right	Thru	Left	Peds	App. Total	Right	Thru	Left	Peds	App. Total	Right	Thru	Left	Peds	App. Total	Int. Total
Peak Hour Analysis From 07:00 AM to 08:45 AM - Peak 1 of 1																					
Peak Hour for Each Approach Begins at:																					
	07:45 AM					08:00 AM					07:45 AM					08:00 AM					
+0 mins.	1	72	**63**	0	136	**84**	32	**57**	**3**	**176**	63	**118**	21	0	**202**	29	55	**10**	0	94	
+15 mins.	6	68	48	0	122	72	37	52	2	163	**70**	108	21	0	199	**42**	63	5	**3**	113	
+30 mins.	**8**	71	59	0	**138**	65	**40**	51	2	158	60	80	**28**	**2**	170	24	**87**	5	1	**117**	
+45 mins.	4	**73**	60	0	137	71	30	52	1	154	69	108	19	1	197	28	60	6	0	94	
Total Volume	19	284	230	0	533	292	139	212	8	651	262	414	89	3	768	123	265	26	4	418	
% App. Total	3.6	53.3	43.2	0		44.9	21.4	32.6	1.2		34.1	53.9	11.6	0.4		29.4	63.4	6.2	1		
PHF	.594	.973	.913	.000	.966	.869	.869	.930	.667	.925	.936	.877	.795	.375	.950	.732	.761	.650	.333	.893	

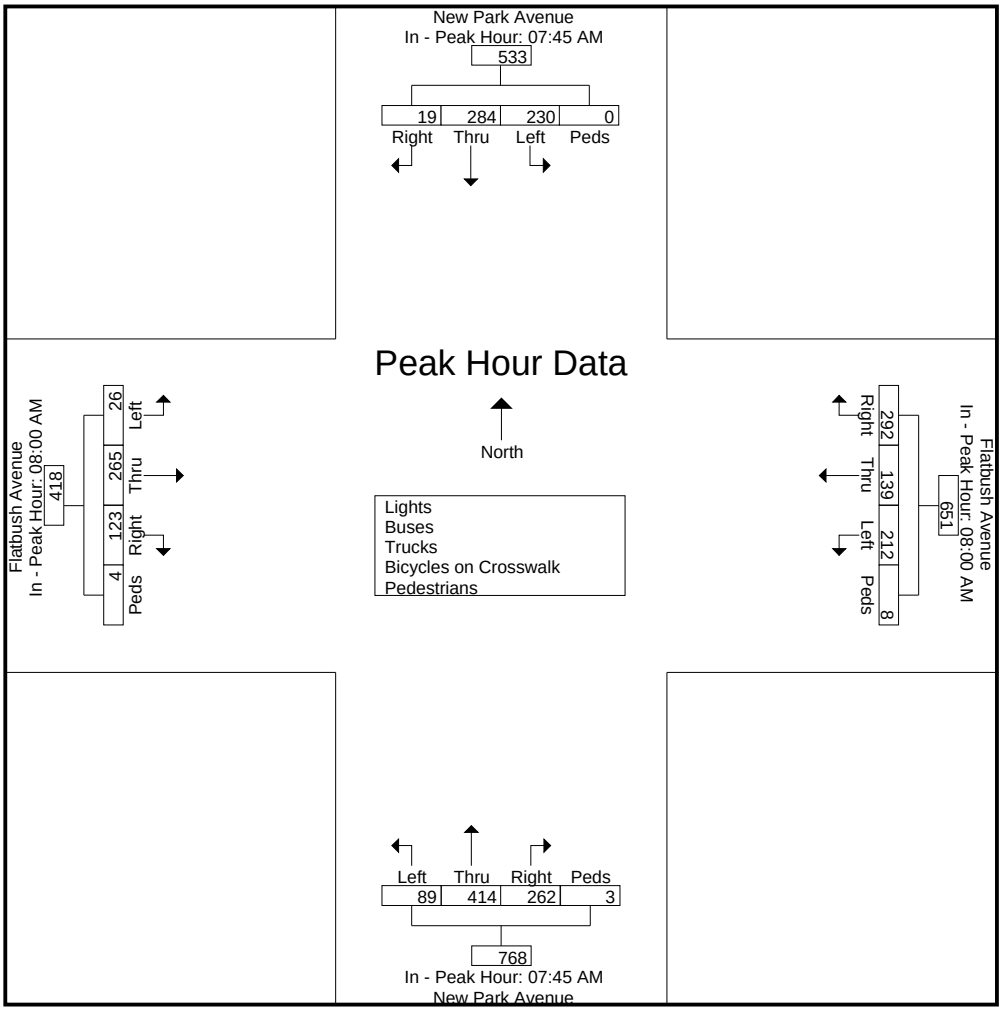

Connecticut Counts LLC

Kensington, Connecticut 06037
(860) 828-1693

New Park Avenue at Flatbush Avenue
West Hartford, Connecticut

File Name : 14135
Site Code : 14135
Start Date : 3/31/2016
Page No : 1

Groups Printed- Lights - Buses - Trucks - Bicycles on Crosswalk - Pedestrians

	New Park Avenue From North					Flatbush Avenue From East					New Park Avenue From South					Flatbush Avenue From West					
Start Time	Right	Thru	Left	Peds	App. Total	Right	Thru	Left	Peds	App. Total	Right	Thru	Left	Peds	App. Total	Right	Thru	Left	Peds	App. Total	Int. Total
04:00 PM	3	123	80	0	206	94	60	59	9	222	87	102	50	3	242	45	48	3	0	96	766
04:15 PM	7	145	81	0	233	103	52	69	1	225	62	85	38	8	193	36	63	2	2	103	754
04:30 PM	4	129	79	4	216	92	57	76	6	231	71	88	45	4	208	41	45	8	2	96	751
04:45 PM	7	147	82	0	236	78	87	66	4	235	62	122	61	2	247	40	42	2	1	85	803
Total	21	544	322	4	891	367	256	270	20	913	282	397	194	17	890	162	198	15	5	380	3074
05:00 PM	4	136	93	2	235	101	66	66	4	237	47	105	38	1	191	19	47	6	0	72	735
05:15 PM	11	150	78	0	239	89	83	70	9	251	51	97	48	7	203	41	56	9	0	106	799
05:30 PM	8	152	104	0	264	90	61	79	1	231	43	87	33	3	166	33	40	1	0	74	735
05:45 PM	3	108	89	0	200	81	72	66	7	226	56	102	41	1	200	35	53	2	0	90	716
Total	26	546	364	2	938	361	282	281	21	945	197	391	160	12	760	128	196	18	0	342	2985
Grand Total	47	1090	686	6	1829	728	538	551	41	1858	479	788	354	29	1650	290	394	33	5	722	6059
Apprch %	2.6	59.6	37.5	0.3		39.2	29	29.7	2.2		29	47.8	21.5	1.8		40.2	54.6	4.6	0.7		
Total %	0.8	18	11.3	0.1	30.2	12	8.9	9.1	0.7	30.7	7.9	13	5.8	0.5	27.2	4.8	6.5	0.5	0.1	11.9	
Lights	46	1064																			
% Lights	97.9	97.6	97.5	0	97.3	97.9	98.1	96.7	0	95.5	96.9	97.8	98.9	0	96.1	98.6	86	100	0	91.1	95.7
Buses	1	8	15	0	24	12	7	3	0	22	8	6	1	0	15	1	50	0	0	51	112
% Buses	2.1	0.7	2.2	0	1.3	1.6	1.3	0.5	0	1.2	1.7	0.8	0.3	0	0.9	0.3	12.7	0	0	7.1	1.8
Trucks	0	18	2	0	20	3	3	15	0	21	7	11	3	0	21	3	5	0	0	8	70
% Trucks	0	1.7	0.3	0	1.1	0.4	0.6	2.7	0	1.1	1.5	1.4	0.8	0	1.3	1	1.3	0	0	1.1	1.2
Bicycles on Crosswalk																					
% Bicycles on Crosswalk	0	0	0	0	0	0	0	0	4.9	0.1	0	0	0	0	0	0	0	0	0	0	0
Pedestrians	0	0	0	6	6	0	0	0	39	39	0	0	0	29	29	0	0	0	5	5	79
% Pedestrians	0	0	0	100	0.3	0	0	0	95.1	2.1	0	0	0	100	1.8	0	0	0	100	0.7	1.3

Connecticut Counts LLC

Kensington, Connecticut 06037
(860) 828-1693

File Name : 14135
Site Code : 14135
Start Date : 3/31/2016
Page No : 2

	New Park Avenue From North					Flatbush Avenue From East					New Park Avenue From South					Flatbush Avenue From West					
Start Time	Right	Thru	Left	Peds	App. Total	Right	Thru	Left	Peds	App. Total	Right	Thru	Left	Peds	App. Total	Right	Thru	Left	Peds	App. Total	Int. Total
Peak Hour Analysis From 04:00 PM to 05:45 PM - Peak 1 of 1																					
Peak Hour for Entire Intersection Begins at 04:30 PM																					
04:30 PM	4	129	79	**4**	216	92	57	**76**	6	231	**71**	88	45	4	208	**41**	45	8	**2**	96	751
04:45 PM	7	147	82	0	236	78	**87**	66	4	235	62	**122**	**61**	2	**247**	40	42	2	1	85	**803**
05:00 PM	4	136	**93**	2	235	**101**	66	66	4	237	47	105	38	1	191	19	47	6	0	72	735
05:15 PM	**11**	**150**	78	0	**239**	89	83	70	**9**	**251**	51	97	48	**7**	203	41	**56**	**9**	0	**106**	799
Total Volume	26	562	332	6	926	360	293	278	23	954	231	412	192	14	849	141	190	25	3	359	3088
% App. Total	2.8	60.7	35.9	0.6		37.7	30.7	29.1	2.4		27.2	48.5	22.6	1.6		39.3	52.9	7	0.8		
PHF	.591	.937	.892	.375	.969	.891	.842	.914	.639	.950	.813	.844	.787	.500	.859	.860	.848	.694	.375	.847	.961

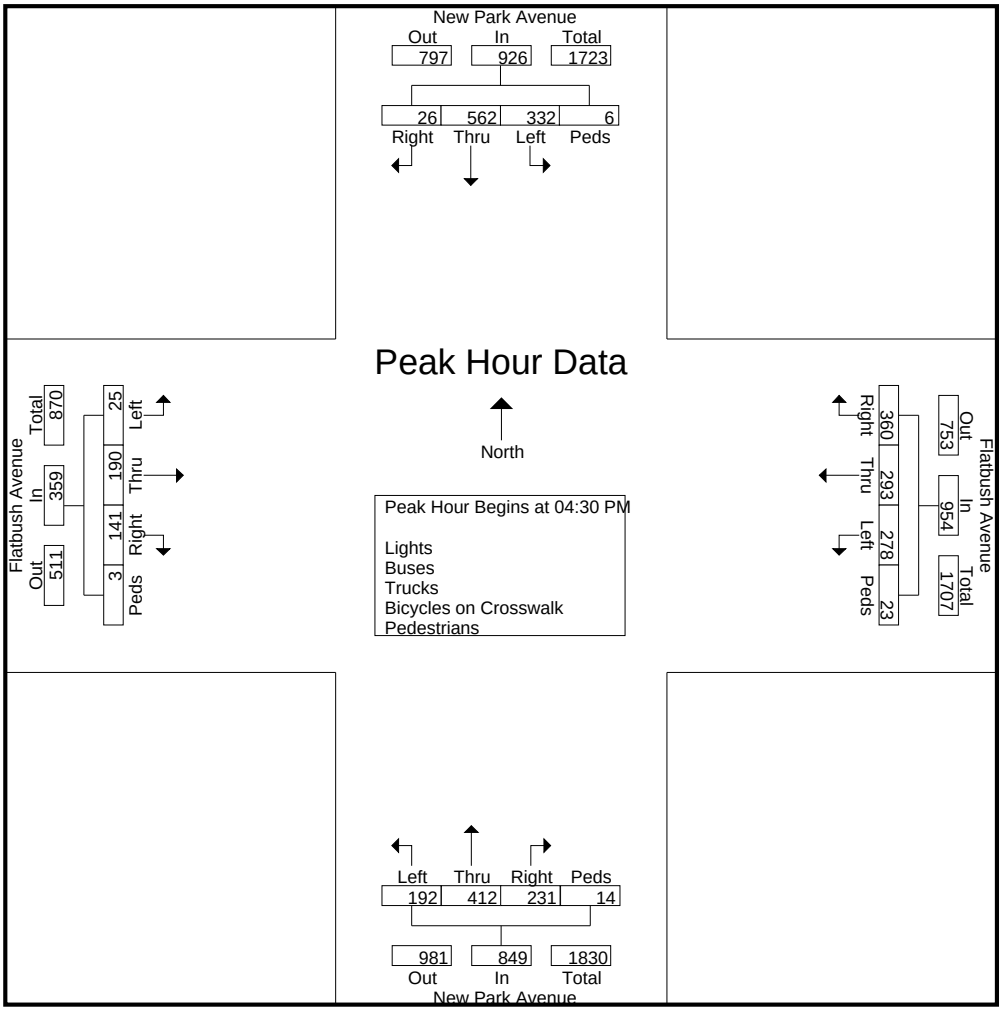

Connecticut Counts LLC

Kensington, Connecticut 06037
(860) 828-1693

File Name : 14135
Site Code : 14135
Start Date : 3/31/2016
Page No : 3

	New Park Avenue From North					Flatbush Avenue From East					New Park Avenue From South					Flatbush Avenue From West					
Start Time	Right	Thru	Left	Peds	App. Total	Right	Thru	Left	Peds	App. Total	Right	Thru	Left	Peds	App. Total	Right	Thru	Left	Peds	App. Total	Int. Total
Peak Hour Analysis From 04:00 PM to 05:45 PM - Peak 1 of 1																					
Peak Hour for Each Approach Begins at:																					
	04:45 PM					04:30 PM					04:00 PM					04:00 PM					
+0 mins.	7	147	82	0	236	92	57	**76**	6	231	**87**	102	50	3	242	**45**	48	3	0	96	
+15 mins.	4	136	93	**2**	235	78	**87**	66	4	235	62	85	38	**8**	193	36	**63**	2	**2**	**103**	
+30 mins.	**11**	150	78	0	239	**101**	66	66	4	237	71	88	45	4	208	41	45	**8**	2	96	
+45 mins.	8	**152**	**104**	0	**264**	89	83	70	**9**	**251**	62	**122**	**61**	2	**247**	40	42	2	1	85	
Total Volume	30	585	357	2	974	360	293	278	23	954	282	397	194	17	890	162	198	15	5	380	
% App. Total	3.1	60.1	36.7	0.2		37.7	30.7	29.1	2.4		31.7	44.6	21.8	1.9		42.6	52.1	3.9	1.3		
PHF	.682	.962	.858	.250	.922	.891	.842	.914	.639	.950	.810	.814	.795	.531	.901	.900	.786	.469	.625	.922	

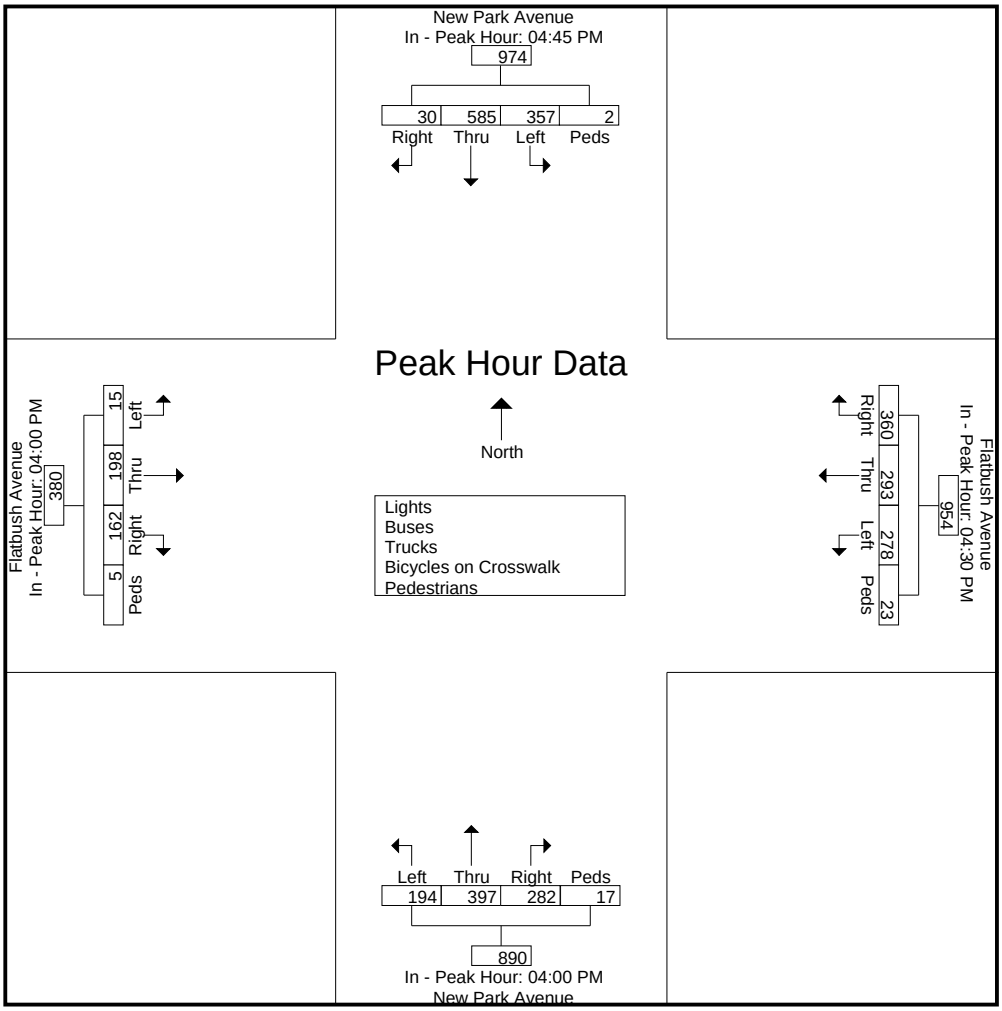

Connecticut Counts LLC

Kensington, Connecticut 06037
(860) 828-1693

New Park Avenue at Flatbush Avenue
West Hartford, Connecticut

File Name : 14136
Site Code : 14136
Start Date : 4/2/2016
Page No : 1

Groups Printed- Lights - Buses - Trucks - Bicycles on Crosswalk - Pedestrians

	New Park Avenue From North					Flatbush Avenue From East					New Park Avenue From South					Flatbush Avenue From West					
Start Time	Right	Thru	Left	Peds	App. Total	Right	Thru	Left	Peds	App. Total	Right	Thru	Left	Peds	App. Total	Right	Thru	Left	Peds	App. Total	Int. Total
11:00 AM	5	111	74	0	190	82	24	69	0	175	88	96	49	5	238	52	30	6	0	88	691
11:15 AM	4	129	73	0	206	80	35	75	1	191	91	116	50	1	258	44	17	2	0	63	718
11:30 AM	3	118	76	0	197	88	32	80	4	204	71	94	46	5	216	44	25	13	0	82	699
11:45 AM	2	105	92	0	199	68	30	66	7	171	77	124	58	1	260	39	25	7	0	71	701
Total	14	463	315	0	792	318	121	290	12	741	327	430	203	12	972	179	97	28	0	304	2809
12:00 PM	3	128	93	0	224	87	35	81	3	206	76	121	41	1	239	42	29	6	0	77	746
12:15 PM	4	127	71	0	202	79	42	70	3	194	66	106	50	4	226	66	32	3	0	101	723
12:30 PM	4	133	77	0	214	91	52	78	1	222	61	124	46	4	235	42	43	7	0	92	763
12:45 PM	4	120	81	0	205	95	48	79	6	228	62	101	43	4	210	39	25	6	2	72	715
Total	15	508	322	0	845	352	177	308	13	850	265	452	180	13	910	189	129	22	2	342	2947
Grand Total	29	971	637	0	1637	670	298	598	25	1591	592	882	383	25	1882	368	226	50	2	646	5756
Apprch %	1.8	59.3	38.9	0		42.1	18.7	37.6	1.6		31.5	46.9	20.4	1.3		57	35	7.7	0.3		
Total %	0.5	16.9	11.1	0	28.4	11.6	5.2	10.4	0.4	27.6	10.3	15.3	6.7	0.4	32.7	6.4	3.9	0.9	0	11.2	
Lights	29	949	627	0	1605	667	294	590	0	1551	586	873	380	0	1839	365	222	49	0	636	5631
% Lights	100	97.7	98.4	0	98	99.6	98.7	98.7	0	97.5	99	99	99.2	0	97.7	99.2	98.2	98	0	98.5	97.8
Buses	0	3	5	0	8	2	4	1	0	7	4	4	0	0	8	0	3	0	0	3	26
% Buses	0	0.3	0.8	0	0.5	0.3	1.3	0.2	0	0.4	0.7	0.5	0	0	0.4	0	1.3	0	0	0.5	0.5
Trucks	0	19	5	0	24	1	0	7	0	8	2	5	3	0	10	3	1	1	0	5	47
% Trucks	0	2	0.8	0	1.5	0.1	0	1.2	0	0.5	0.3	0.6	0.8	0	0.5	0.8	0.4	2	0	0.8	0.8
Bicycles on Crosswalk																					
% Bicycles on Crosswalk	0	0	0	0	0	0	0	0	0	0	0	0	0	0	0	0	0	0	0	0	0
Pedestrians	0	0	0	0	0	0	0	0	25	25	0	0	0	25	25	0	0	0	2	2	52
% Pedestrians	0	0	0	0	0	0	0	0	100	1.6	0	0	0	100	1.3	0	0	0	100	0.3	0.9

Connecticut Counts LLC

Kensington, Connecticut 06037
(860) 828-1693

File Name : 14136
Site Code : 14136
Start Date : 4/2/2016
Page No : 2

	New Park Avenue From North					Flatbush Avenue From East					New Park Avenue From South					Flatbush Avenue From West					
Start Time	Right	Thru	Left	Peds	App. Total	Right	Thru	Left	Peds	App. Total	Right	Thru	Left	Peds	App. Total	Right	Thru	Left	Peds	App. Total	Int. Total
Peak Hour Analysis From 11:00 AM to 12:45 PM - Peak 1 of 1																					
Peak Hour for Entire Intersection Begins at 12:00 PM																					
12:00 PM	3	128	**93**	0	**224**	87	35	**81**	3	206	**76**	121	41	1	**239**	42	29	6	0	77	746
12:15 PM	**4**	127	71	0	202	79	42	70	3	194	66	106	**50**	**4**	226	**66**	32	3	0	**101**	723
12:30 PM	4	**133**	77	0	214	91	**52**	78	1	222	61	**124**	46	4	235	42	**43**	**7**	0	92	**763**
12:45 PM	4	120	81	0	205	**95**	48	79	**6**	**228**	62	101	43	4	210	39	25	6	**2**	72	715
Total Volume	15	508	322	0	845	352	177	308	13	850	265	452	180	13	910	189	129	22	2	342	2947
% App. Total	1.8	60.1	38.1	0		41.4	20.8	36.2	1.5		29.1	49.7	19.8	1.4		55.3	37.7	6.4	0.6		
PHF	.938	.955	.866	.000	.943	.926	.851	.951	.542	.932	.872	.911	.900	.813	.952	.716	.750	.786	.250	.847	.966

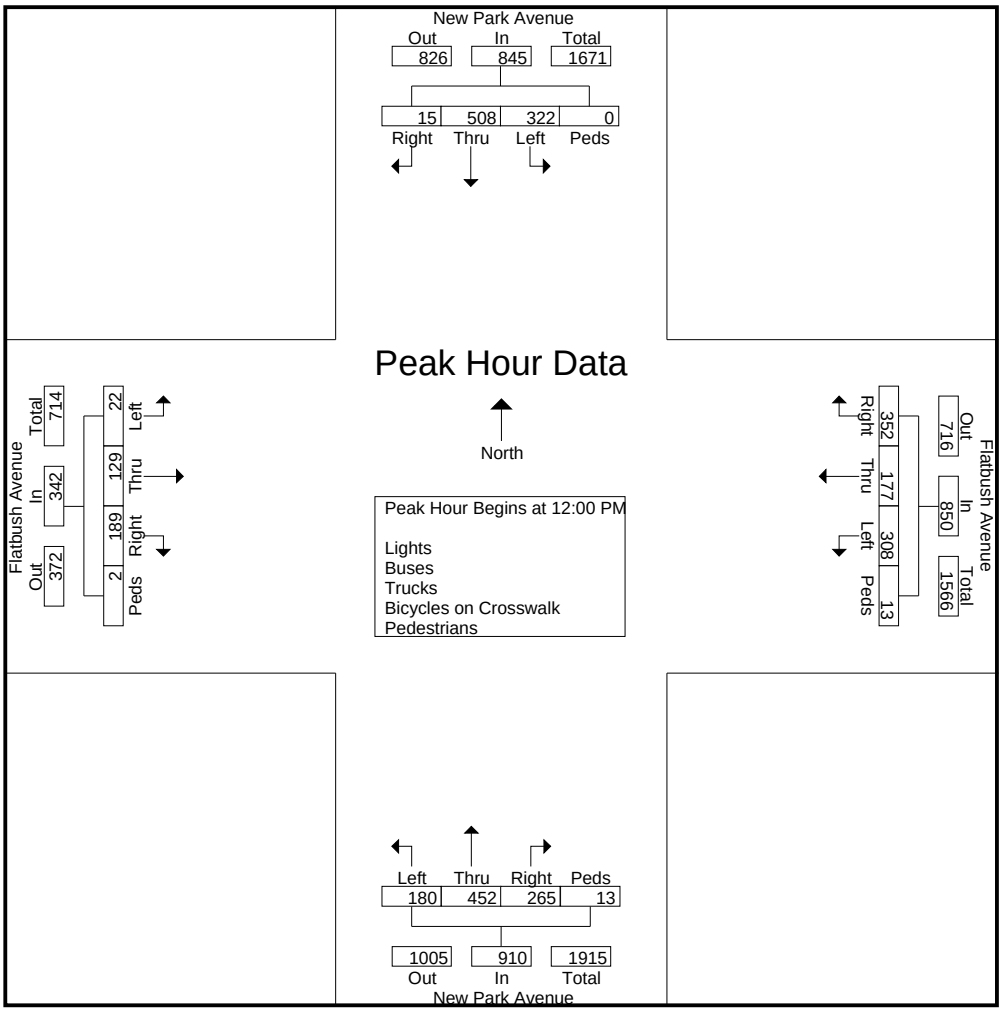

Connecticut Counts LLC

Kensington, Connecticut 06037
(860) 828-1693

File Name : 14136
Site Code : 14136
Start Date : 4/2/2016
Page No : 3

	New Park Avenue From North					Flatbush Avenue From East					New Park Avenue From South					Flatbush Avenue From West					
Start Time	Right	Thru	Left	Peds	App. Total	Right	Thru	Left	Peds	App. Total	Right	Thru	Left	Peds	App. Total	Right	Thru	Left	Peds	App. Total	Int. Total
Peak Hour Analysis From 11:00 AM to 12:45 PM - Peak 1 of 1																					
Peak Hour for Each Approach Begins at:																					
	12:00 PM					12:00 PM					11:15 AM					12:00 PM					
+0 mins.	3	128	**93**	0	**224**	87	35	**81**	3	206	**91**	116	50	1	258	42	29	6	0	77	
+15 mins.	**4**	127	71	0	202	79	42	70	3	194	71	94	46	**5**	216	**66**	32	3	0	**101**	
+30 mins.	4	**133**	77	0	214	91	**52**	78	1	222	77	**124**	**58**	1	**260**	42	**43**	**7**	0	92	
+45 mins.	4	120	81	0	205	**95**	48	79	**6**	**228**	76	121	41	1	239	39	25	6	**2**	72	
Total Volume	15	508	322	0	845	352	177	308	13	850	315	455	195	8	973	189	129	22	2	342	
% App. Total	1.8	60.1	38.1	0		41.4	20.8	36.2	1.5		32.4	46.8	20	0.8		55.3	37.7	6.4	0.6		
PHF	.938	.955	.866	.000	.943	.926	.851	.951	.542	.932	.865	.917	.841	.400	.936	.716	.750	.786	.250	.847	

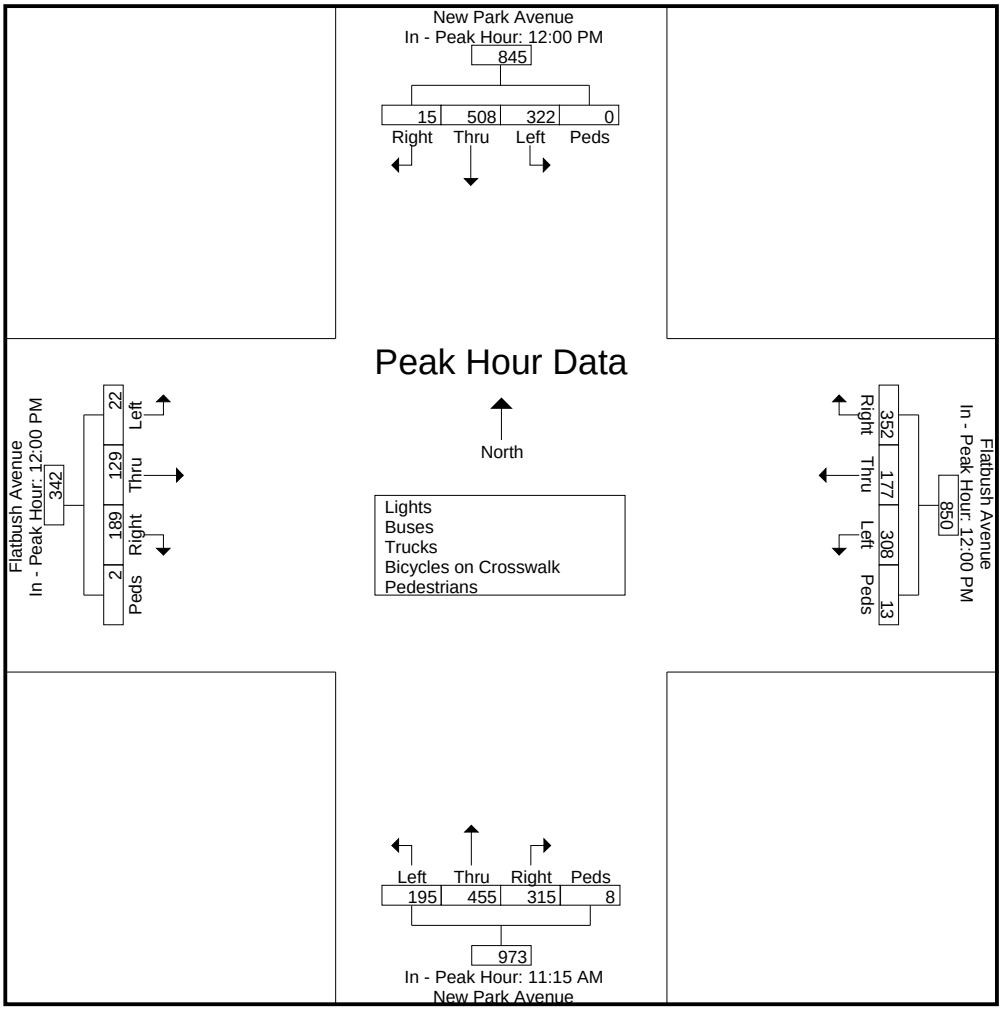

Connecticut Counts LLC

Kensington, Connecticut 06037
(860) 828-1693

New Park Ave at Prospect Ave/Private Dr
West Hartford, Connecticut

File Name : 14137
Site Code : 14137
Start Date : 3/31/2016
Page No : 1

Groups Printed- Unshifted - Bank 1 - Bank 2

	New Park Avenue From North					Private Drive From East					New Park Avenue From South					Prospect Avenue From West					
Start Time	Right	Thru	Left	Peds	App. Total	Right	Thru	Left	Peds	App. Total	Right	Thru	Left	Peds	App. Total	Right	Thru	Left	Peds	App. Total	Int. Total
07:00 AM	1	31	0	0	32	0	0	0	2	2	0	54	60	0	114	64	2	1	4	71	219
07:15 AM	0	26	0	0	26	0	0	0	7	7	2	82	83	0	167	65	0	2	0	67	267
07:30 AM	0	38	0	0	38	0	0	1	1	2	1	63	90	0	154	72	0	1	1	74	268
07:45 AM	1	52	0	0	53	0	0	0	2	2	2	99	90	0	191	71	0	0	1	72	318
Total	2	147	0	0	149	0	0	1	12	13	5	298	323	0	626	272	2	4	6	284	1072
08:00 AM	2	46	0	0	48	0	0	0	1	1	0	96	93	1	190	63	15	1	0	79	318
08:15 AM	2	62	0	0	64	0	1	0	0	1	0	78	87	1	166	66	2	1	0	69	300
08:30 AM	0	50	0	0	50	0	0	0	2	2	0	81	91	0	172	72	0	1	0	73	297
08:45 AM	5	40	0	0	45	0	0	0	3	3	0	96	93	0	189	80	0	0	0	80	317
Total	9	198	0	0	207	0	1	0	6	7	0	351	364	2	717	281	17	3	0	301	1232
Grand Total	11	345	0	0	356	0	1	1	18	20	5	649	687	2	1343	553	19	7	6	585	2304
Apprch %	3.1	96.9	0	0		0	5	5	90		0.4	48.3	51.2	0.1		94.5	3.2	1.2	1		
Total %	0.5	15	0	0	15.5	0	0	0	0.8	0.9	0.2	28.2	29.8	0.1	58.3	24	0.8	0.3	0.3	25.4	
Unshifted	10	317	0	0	327	0	1	1	18	20	5	622	656	2	1285	525	19	7	6	557	2189
% Unshifted																					
Bank 1	1	7	0	0	8	0	0	0	0	0	0	10	17	0	27	12	0	0	0	12	47
% Bank 1	9.1	2	0	0	2.2	0	0	0	0	0	0	1.5	2.5	0	2	2.2	0	0	0	2.1	2
Bank 2	0	21	0	0	21	0	0	0	0	0	0	17	14	0	31	16	0	0	0	16	68
% Bank 2	0	6.1	0	0	5.9	0	0	0	0	0	0	2.6	2	0	2.3	2.9	0	0	0	2.7	3

Connecticut Counts LLC

Kensington, Connecticut 06037
(860) 828-1693

File Name : 14137
Site Code : 14137
Start Date : 3/31/2016
Page No : 2

	New Park Avenue From North					Private Drive From East					New Park Avenue From South					Prospect Avenue From West					
Start Time	Right	Thru	Left	Peds	App. Total	Right	Thru	Left	Peds	App. Total	Right	Thru	Left	Peds	App. Total	Right	Thru	Left	Peds	App. Total	Int. Total
Peak Hour Analysis From 07:00 AM to 08:45 AM - Peak 1 of 1																					
Peak Hour for Entire Intersection Begins at 07:45 AM																					
07:45 AM	1	52	0	0	53	0	0	0	**2**	**2**	**2**	**99**	90	0	**191**	71	0	0	**1**	72	**318**
08:00 AM	**2**	46	0	0	48	0	0	0	1	1	0	96	**93**	**1**	190	63	**15**	**1**	0	**79**	318
08:15 AM	2	**62**	0	0	**64**	0	**1**	0	0	1	0	78	87	1	166	66	2	1	0	69	300
08:30 AM	0	50	0	0	50	0	0	0	2	2	0	81	91	0	172	**72**	0	1	0	73	297
Total Volume	5	210	0	0	215	0	1	0	5	6	2	354	361	2	719	272	17	3	1	293	1233
% App. Total	2.3	97.7	0	0		0	16.7	0	83.3		0.3	49.2	50.2	0.3		92.8	5.8	1	0.3		
PHF	.625	.847	.000	.000	.840	.000	.250	.000	.625	.750	.250	.894	.970	.500	.941	.944	.283	.750	.250	.927	.969

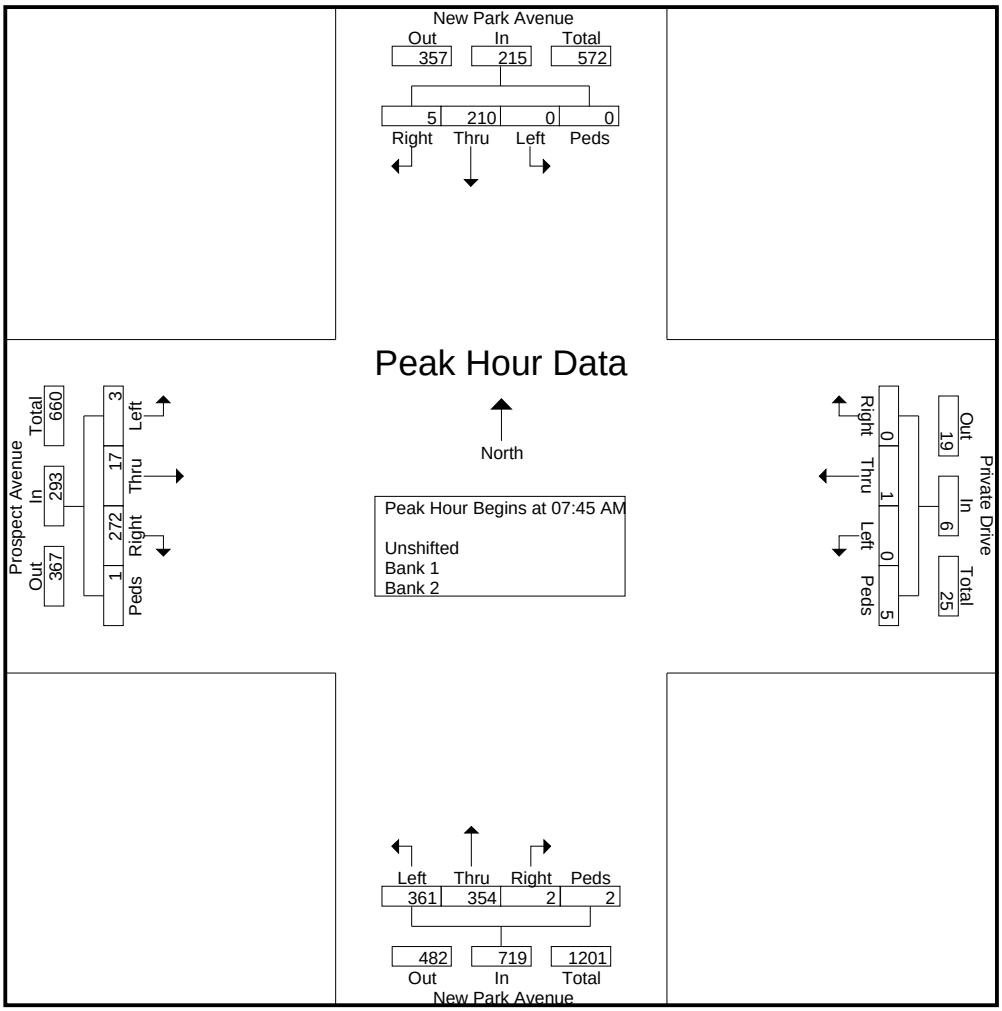

Connecticut Counts LLC

Kensington, Connecticut 06037
(860) 828-1693

File Name : 14137
Site Code : 14137
Start Date : 3/31/2016
Page No : 3

	New Park Avenue From North					Private Drive From East					New Park Avenue From South					Prospect Avenue From West					
Start Time	Right	Thru	Left	Peds	App. Total	Right	Thru	Left	Peds	App. Total	Right	Thru	Left	Peds	App. Total	Right	Thru	Left	Peds	App. Total	Int. Total
Peak Hour Analysis From 07:00 AM to 08:45 AM - Peak 1 of 1																					
Peak Hour for Each Approach Begins at:																					
	07:45 AM					07:00 AM					07:45 AM					08:00 AM					
+0 mins.	1	52	0	0	53	0	0	0	2	2	**2**	**99**	90	0	**191**	63	**15**	**1**	0	79	
+15 mins.	**2**	46	0	0	48	0	0	0	**7**	**7**	0	96	**93**	**1**	190	66	2	1	0	69	
+30 mins.	2	**62**	0	0	**64**	0	0	**1**	1	2	0	78	87	1	166	72	0	1	0	73	
+45 mins.	0	50	0	0	50	0	0	0	2	2	0	81	91	0	172	**80**	0	0	0	**80**	
Total Volume	5	210	0	0	215	0	0	1	12	13	2	354	361	2	719	281	17	3	0	301	
% App. Total	2.3	97.7	0	0		0	0	7.7	92.3		0.3	49.2	50.2	0.3		93.4	5.6	1	0		
PHF	.625	.847	.000	.000	.840	.000	.000	.250	.429	.464	.250	.894	.970	.500	.941	.878	.283	.750	.000	.941	

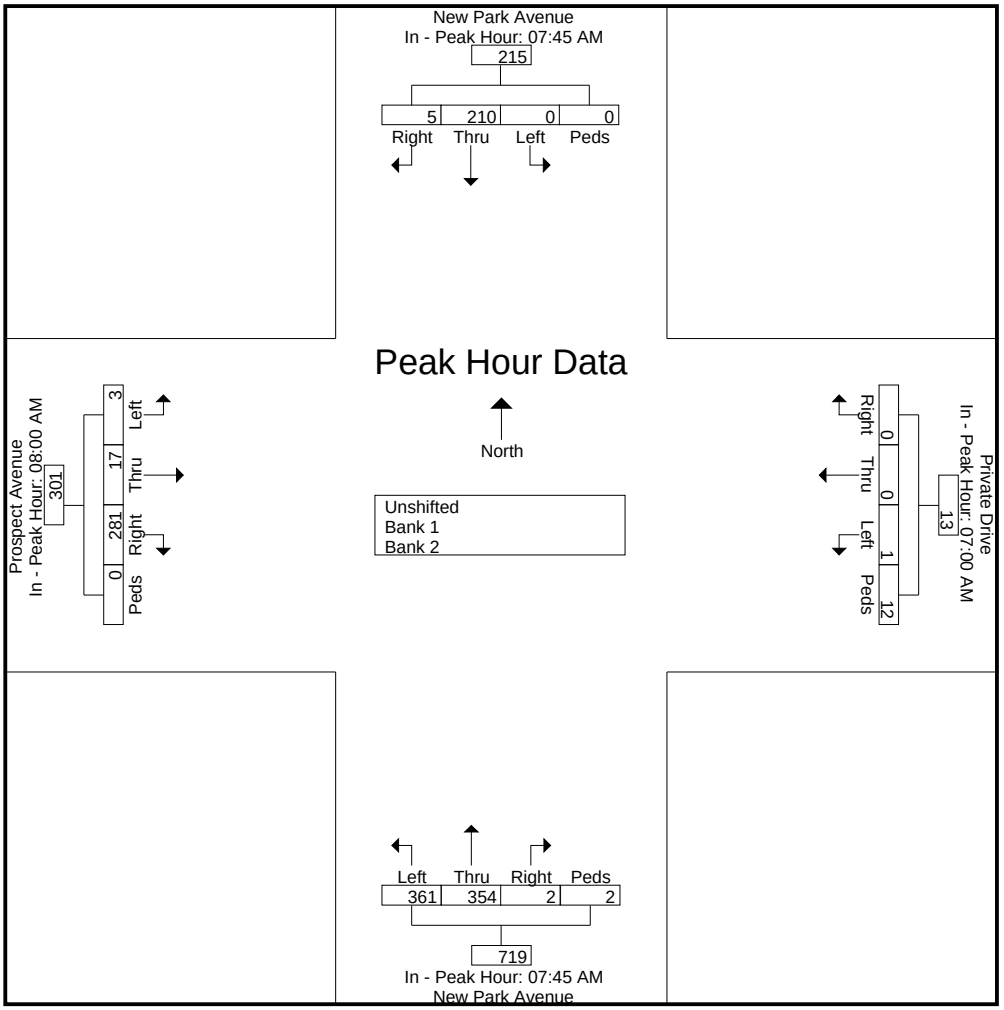

Connecticut Counts LLC

Kensington, Connecticut 06037
(860) 828-1693

New Park Ave at Prospect Ave/Private Dr
West Hartford, Connecticut

File Name : 14138
Site Code : 14138
Start Date : 3/31/2016
Page No : 1

Groups Printed- Unshifted - Bank 1 - Bank 2

	New Park Avenue From North					Private Drive From East					New Park Avenue From South					Prospect Avenue From West					
Start Time	Right	Thru	Left	Peds	App. Total	Right	Thru	Left	Peds	App. Total	Right	Thru	Left	Peds	App. Total	Right	Thru	Left	Peds	App. Total	Int. Total
04:00 PM	0	87	0	0	87	0	0	0	5	5	0	71	133	0	204	118	0	1	0	119	415
04:15 PM	1	113	0	0	114	0	1	2	1	4	1	81	100	3	185	153	0	4	0	157	460
04:30 PM	2	104	0	0	106	0	0	1	6	7	1	69	119	0	189	148	0	4	0	152	454
04:45 PM	1	104	0	0	105	0	0	0	3	3	0	95	113	1	209	141	0	2	0	143	460
Total	4	408	0	0	412	0	1	3	15	19	2	316	465	4	787	560	0	11	0	571	1789
05:00 PM	2	107	0	0	109	0	1	0	2	3	1	109	108	2	220	181	0	4	0	185	517
05:15 PM	1	121	0	0	122	0	1	1	7	9	1	104	121	3	229	173	0	6	0	179	539
05:30 PM	0	102	0	2	104	0	1	0	2	3	0	88	92	0	180	135	0	4	0	139	426
05:45 PM	1	109	0	0	110	0	1	0	0	1	0	82	87	0	169	130	0	4	0	134	414
Total	4	439	0	2	445	0	4	1	11	16	2	383	408	5	798	619	0	18	0	637	1896
Grand Total	8	847	0	2	857	0	5	4	26	35	4	699	873	9	1585	1179	0	29	0	1208	3685
Apprch %	0.9	98.8	0	0.2		0	14.3	11.4	74.3		0.3	44.1	55.1	0.6		97.6	0	2.4	0		
Total %	0.2	23	0	0.1	23.3	0	0.1	0.1	0.7	0.9	0.1	19	23.7	0.2	43	32	0	0.8	0	32.8	
Unshifted	8	836	0	2	846	0	5	4	26	35	4	690	854	9	1557	1147					
% Unshifted	100	98.7	0	100	98.7	0	100	100	100	100	100	98.7	97.8	100	98.2	97.3	0	100	0	97.4	98.1
Bank 1	0	4	0	0	4	0	0	0	0	0	0	2	8	0	10	14	0	0	0	14	28
% Bank 1	0	0.5	0	0	0.5	0	0	0	0	0	0	0.3	0.9	0	0.6	1.2	0	0	0	1.2	0.8
Bank 2	0	7	0	0	7	0	0	0	0	0	0	7	11	0	18	18	0	0	0	18	43
% Bank 2	0	0.8	0	0	0.8	0	0	0	0	0	0	1	1.3	0	1.1	1.5	0	0	0	1.5	1.2

Connecticut Counts LLC

Kensington, Connecticut 06037
(860) 828-1693

File Name : 14138
Site Code : 14138
Start Date : 3/31/2016
Page No : 2

	New Park Avenue From North					Private Drive From East					New Park Avenue From South					Prospect Avenue From West					
Start Time	Right	Thru	Left	Peds	App. Total	Right	Thru	Left	Peds	App. Total	Right	Thru	Left	Peds	App. Total	Right	Thru	Left	Peds	App. Total	Int. Total
Peak Hour Analysis From 04:00 PM to 05:45 PM - Peak 1 of 1																					
Peak Hour for Entire Intersection Begins at 04:30 PM																					
04:30 PM	**2**	104	0	0	106	0	0	**1**	6	7	**1**	69	119	0	189	148	0	4	0	152	454
04:45 PM	1	104	0	0	105	0	0	0	3	3	0	95	113	1	209	141	0	2	0	143	460
05:00 PM	2	107	0	0	109	0	**1**	0	2	3	1	**109**	108	2	220	**181**	0	4	0	**185**	517
05:15 PM	1	**121**	0	0	**122**	0	1	1	**7**	**9**	1	104	**121**	**3**	**229**	173	0	**6**	0	179	**539**
Total Volume	6	436	0	0	442	0	2	2	18	22	3	377	461	6	847	643	0	16	0	659	1970
% App. Total	1.4	98.6	0	0		0	9.1	9.1	81.8		0.4	44.5	54.4	0.7		97.6	0	2.4	0		
PHF	.750	.901	.000	.000	.906	.000	.500	.500	.643	.611	.750	.865	.952	.500	.925	.888	.000	.667	.000	.891	.914

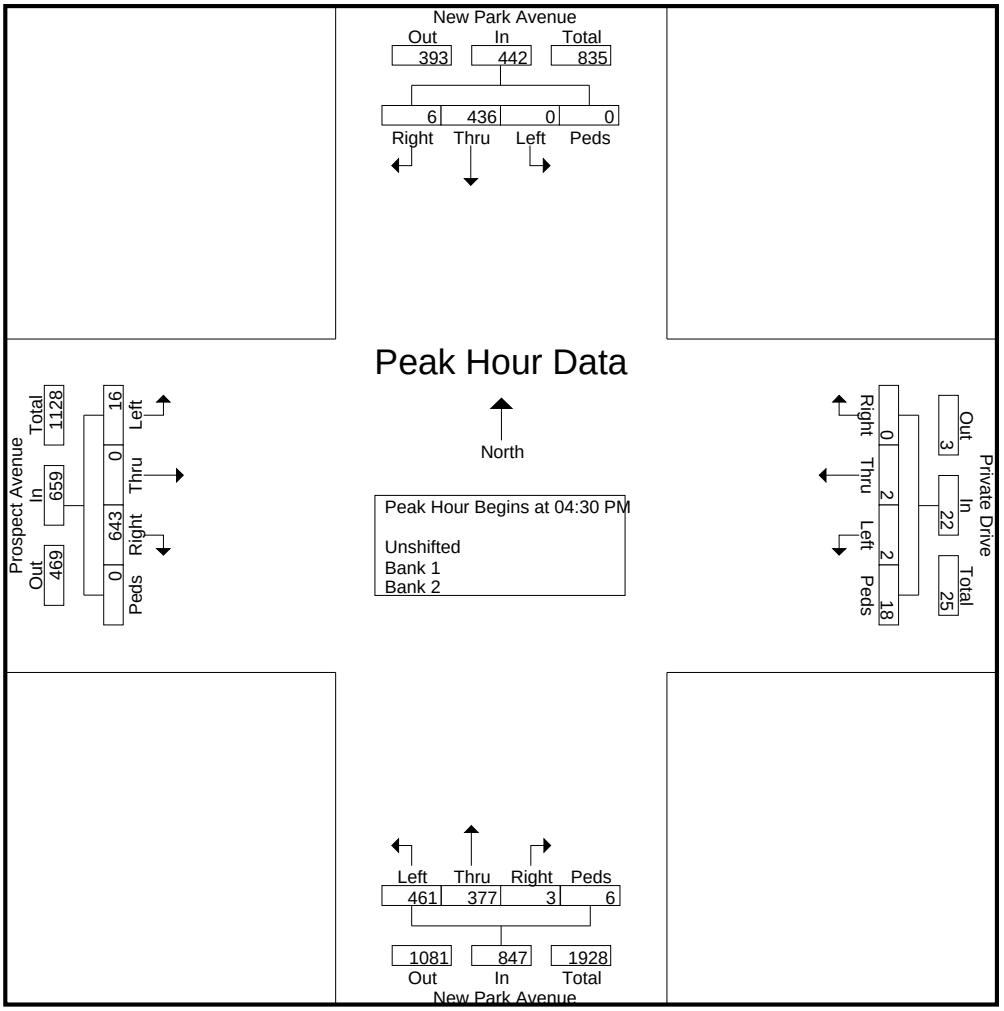

Connecticut Counts LLC

Kensington, Connecticut 06037
(860) 828-1693

File Name : 14138
Site Code : 14138
Start Date : 3/31/2016
Page No : 3

	New Park Avenue From North					Private Drive From East					New Park Avenue From South					Prospect Avenue From West					
Start Time	Right	Thru	Left	Peds	App. Total	Right	Thru	Left	Peds	App. Total	Right	Thru	Left	Peds	App. Total	Right	Thru	Left	Peds	App. Total	Int. Total
Peak Hour Analysis From 04:00 PM to 05:45 PM - Peak 1 of 1																					
Peak Hour for Each Approach Begins at:																					
	05:00 PM					04:30 PM					04:30 PM					04:30 PM					
+0 mins.	**2**	107	0	0	109	0	0	**1**	6	7	**1**	69	119	0	189	148	0	4	0	152	
+15 mins.	1	**121**	0	0	**122**	0	0	0	3	3	0	95	113	1	209	141	0	2	0	143	
+30 mins.	0	102	0	**2**	104	0	**1**	0	2	3	1	**109**	108	2	220	**181**	0	4	0	**185**	
+45 mins.	1	109	0	0	110	0	1	1	**7**	**9**	1	104	**121**	**3**	**229**	173	0	**6**	0	179	
Total Volume	4	439	0	2	445	0	2	2	18	22	3	377	461	6	847	643	0	16	0	659	
% App. Total	0.9	98.7	0	0.4		0	9.1	9.1	81.8		0.4	44.5	54.4	0.7		97.6	0	2.4	0		
PHF	.500	.907	.000	.250	.912	.000	.500	.500	.643	.611	.750	.865	.952	.500	.925	.888	.000	.667	.000	.891	

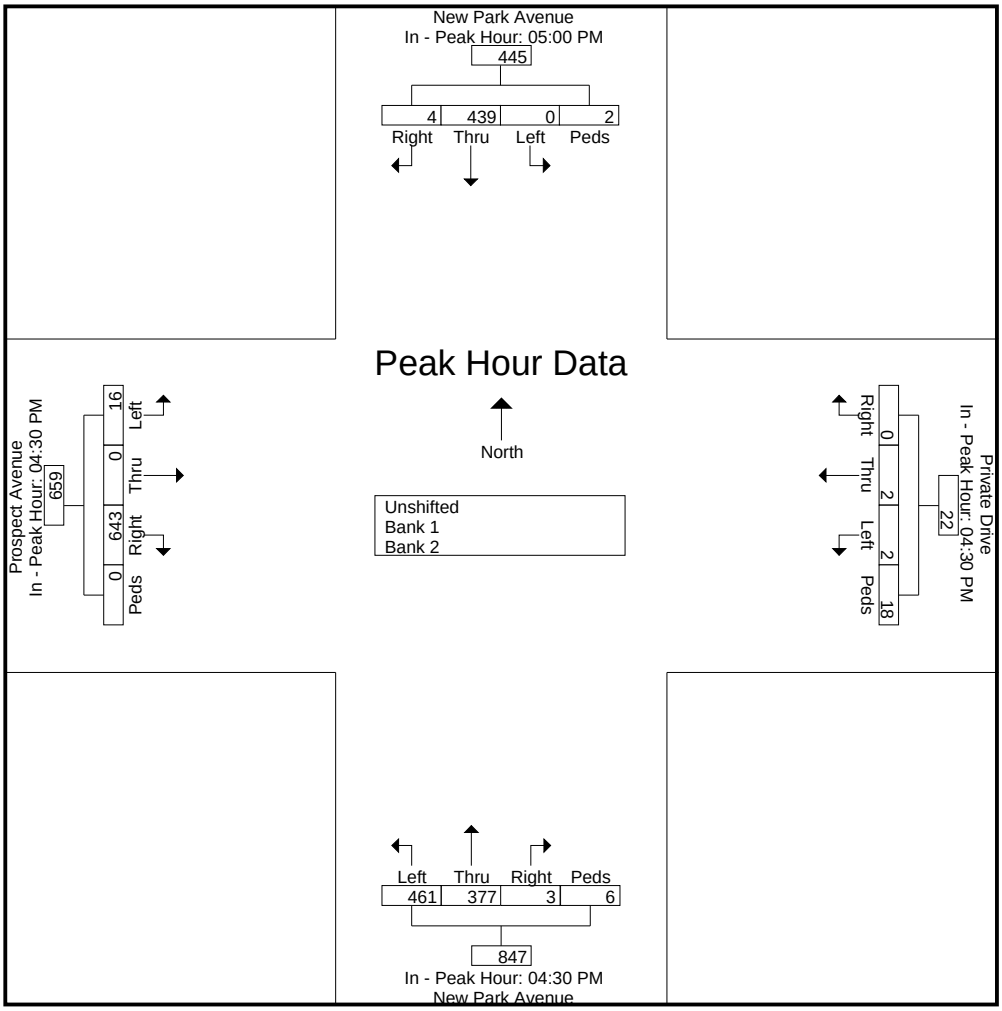

Connecticut Counts LLC

Kensington, Connecticut 06037
(860) 828-1693

New Park Ave at Prospect Ave/Private Dr
West Hartford, Connecticut

File Name : 14139
Site Code : 14139
Start Date : 4/2/2016
Page No : 1

Groups Printed- Unshifted - Bank 1 - Bank 2

	New Park Avenue From North					Private Drive From East					New Park Avenue From South					Prospect Avenue From West					
Start Time	Right	Thru	Left	Peds	App. Total	Right	Thru	Left	Peds	App. Total	Right	Thru	Left	Peds	App. Total	Right	Thru	Left	Peds	App. Total	Int. Total
11:00 AM	3	120	1	0	124	1	0	0	0	1	0	136	116	1	253	144	0	3	0	147	525
11:15 AM	1	87	1	0	89	0	0	1	1	2	0	85	104	1	190	124	0	5	0	129	410
11:30 AM	4	80	0	0	84	0	0	0	3	3	0	69	89	0	158	110	0	2	0	112	357
11:45 AM	0	77	0	0	77	0	0	0	0	0	0	91	101	0	192	104	0	2	0	106	375
Total	8	364	2	0	374	1	0	1	4	6	0	381	410	2	793	482	0	12	0	494	1667
12:00 PM	2	63	0	0	65	0	0	0	0	0	0	90	93	0	183	126	0	1	0	127	375
12:15 PM	0	98	0	0	98	0	0	0	1	1	0	77	114	0	191	140	0	1	0	141	431
12:30 PM	2	85	0	0	87	0	0	0	2	2	1	83	113	0	197	103	0	2	0	105	391
12:45 PM	2	94	0	0	96	0	0	1	0	1	0	101	99	2	202	132	0	1	0	133	432
Total	6	340	0	0	346	0	0	1	3	4	1	351	419	2	773	501	0	5	0	506	1629
Grand Total	14	704	2	0	720	1	0	2	7	10	1	732	829	4	1566	983	0	17	0	1000	3296
Apprch %	1.9	97.8	0.3	0		10	0	20	70		0.1	46.7	52.9	0.3		98.3	0	1.7	0		
Total %	0.4	21.4	0.1	0	21.8	0	0	0.1	0.2	0.3	0	22.2	25.2	0.1	47.5	29.8	0	0.5	0	30.3	
Unshifted	14	697	2	0	713	1	0	2	7	10	1	728	823	4	1556	976	0	17	0	993	3272
% Unshifted																					
Bank 1	0	2	0	0	2	0	0	0	0	0	0	0	5	0	5	4	0	0	0	4	11
% Bank 1	0	0.3	0	0	0.3	0	0	0	0	0	0	0	0.6	0	0.3	0.4	0	0	0	0.4	0.3
Bank 2	0	5	0	0	5	0	0	0	0	0	0	4	1	0	5	3	0	0	0	3	13
% Bank 2	0	0.7	0	0	0.7	0	0	0	0	0	0	0.5	0.1	0	0.3	0.3	0	0	0	0.3	0.4

Connecticut Counts LLC

Kensington, Connecticut 06037
(860) 828-1693

File Name : 14139
Site Code : 14139
Start Date : 4/2/2016
Page No : 2

	New Park Avenue From North					Private Drive From East					New Park Avenue From South					Prospect Avenue From West					
Start Time	Right	Thru	Left	Peds	App. Total	Right	Thru	Left	Peds	App. Total	Right	Thru	Left	Peds	App. Total	Right	Thru	Left	Peds	App. Total	Int. Total
Peak Hour Analysis From 11:00 AM to 12:45 PM - Peak 1 of 1																					
Peak Hour for Entire Intersection Begins at 11:00 AM																					
11:00 AM	3	**120**	**1**	0	**124**	**1**	0	0	0	1	0	**136**	**116**	**1**	**253**	**144**	0	3	0	**147**	**525**
11:15 AM	1	87	1	0	89	0	0	**1**	1	2	0	85	104	1	190	124	0	**5**	0	129	410
11:30 AM	**4**	80	0	0	84	0	0	0	**3**	**3**	0	69	89	0	158	110	0	2	0	112	357
11:45 AM	0	77	0	0	77	0	0	0	0	0	0	91	101	0	192	104	0	2	0	106	375
Total Volume	8	364	2	0	374	1	0	1	4	6	0	381	410	2	793	482	0	12	0	494	1667
% App. Total	2.1	97.3	0.5	0		16.7	0	16.7	66.7		0	48	51.7	0.3		97.6	0	2.4	0		
PHF	.500	.758	.500	.000	.754	.250	.000	.250	.333	.500	.000	.700	.884	.500	.784	.837	.000	.600	.000	.840	.794

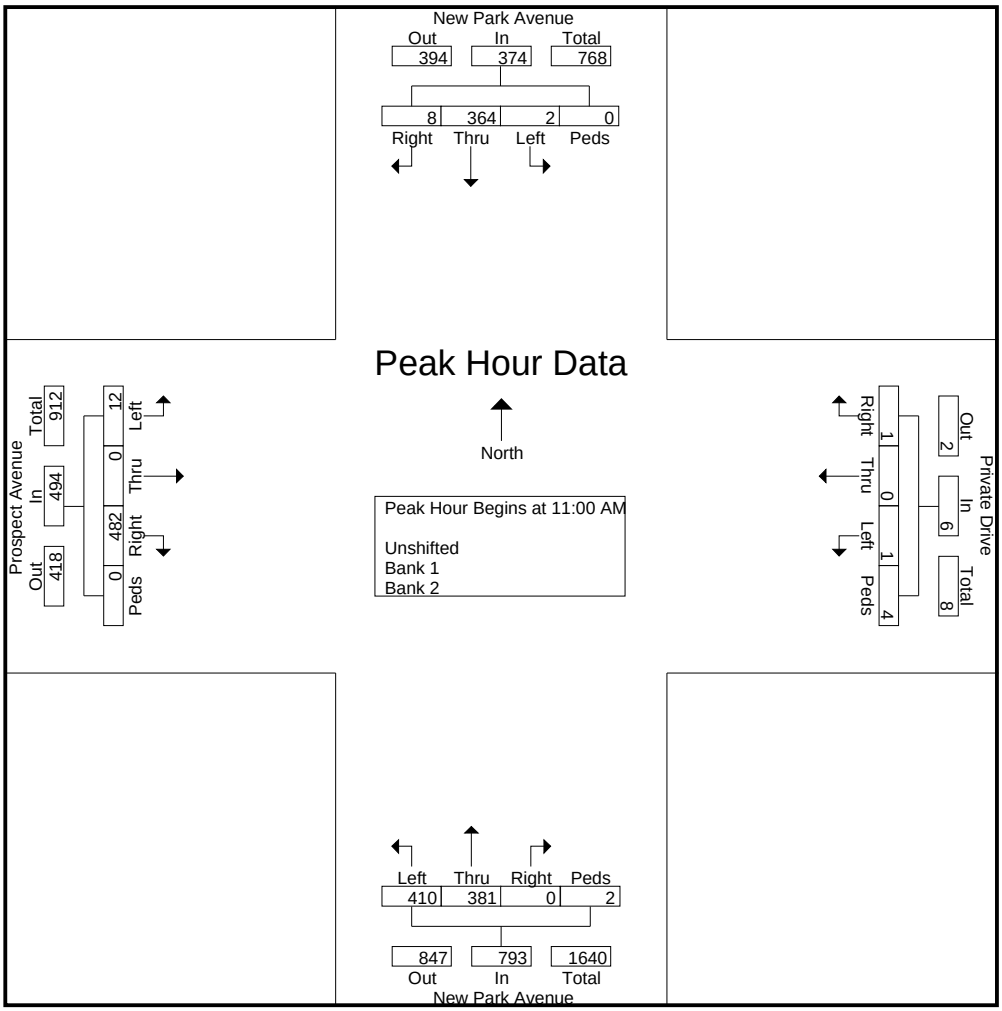

Connecticut Counts LLC

Kensington, Connecticut 06037
(860) 828-1693

File Name : 14139
Site Code : 14139
Start Date : 4/2/2016
Page No : 3
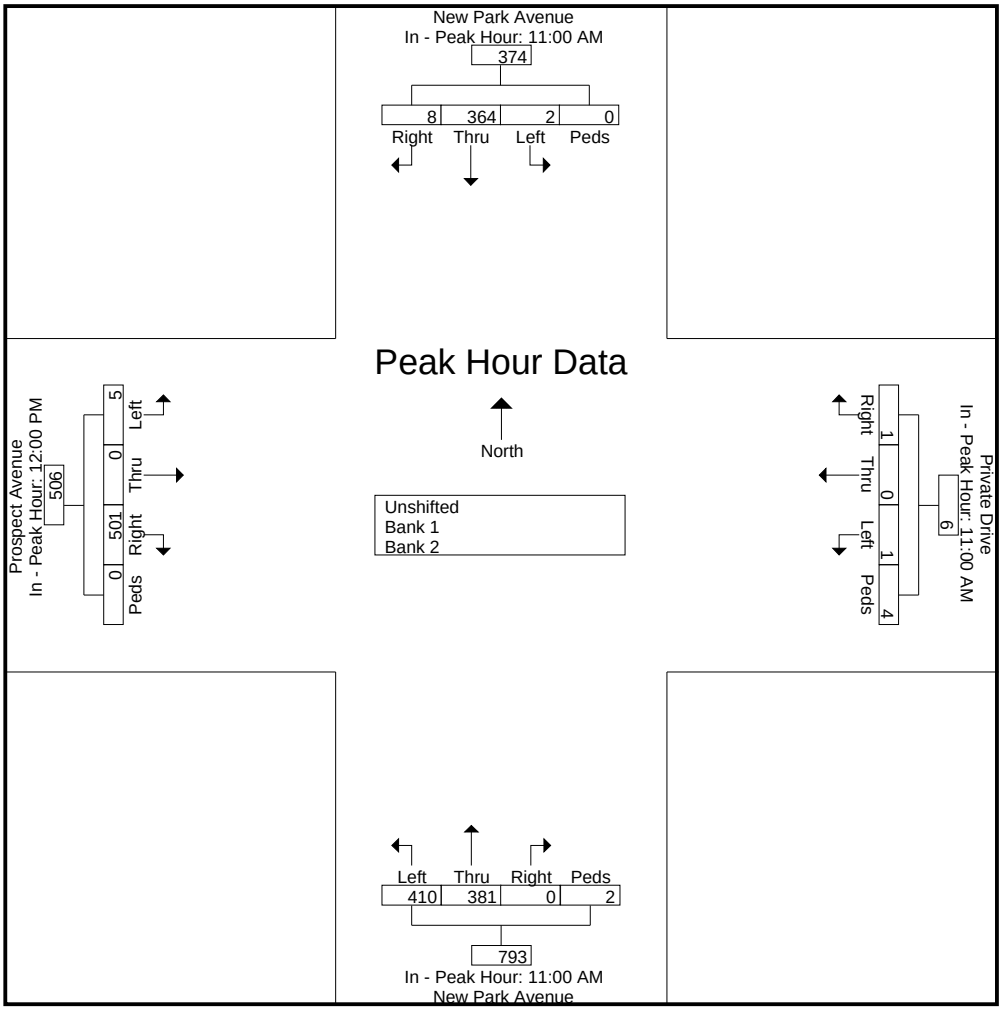
	New Park Avenue From North					Private Drive From East					New Park Avenue From South					Prospect Avenue From West					
Start Time	Right	Thru	Left	Peds	App. Total	Right	Thru	Left	Peds	App. Total	Right	Thru	Left	Peds	App. Total	Right	Thru	Left	Peds	App. Total	Int. Total
Peak Hour Analysis From 11:00 AM to 12:45 PM - Peak 1 of 1																					
Peak Hour for Each Approach Begins at:																					
	11:00 AM					11:00 AM					11:00 AM					12:00 PM					
+0 mins.	3	**120**	**1**	0	**124**	**1**	0	0	0	1	0	**136**	**116**	**1**	**253**	126	0	1	0	127	
+15 mins.	1	87	1	0	89	0	0	**1**	1	2	0	85	104	1	190	**140**	0	1	0	**141**	
+30 mins.	**4**	80	0	0	84	0	0	0	**3**	**3**	0	69	89	0	158	103	0	**2**	0	105	
+45 mins.	0	77	0	0	77	0	0	0	0	0	0	91	101	0	192	132	0	1	0	133	
Total Volume	8	364	2	0	374	1	0	1	4	6	0	381	410	2	793	501	0	5	0	506	
% App. Total	2.1	97.3	0.5	0		16.7	0	16.7	66.7		0	48	51.7	0.3		99	0	1	0		
PHF	.500	.758	.500	.000	.754	.250	.000	.250	.333	.500	.000	.700	.884	.500	.784	.895	.000	.625	.000	.897